HEIDENHAIN

HEIDENHAIN Motors

for Axis and Spindle Drives

Information for the Machine Tool Builder

July 2013

Synchronous motors for feed drives

Motors for axis and spindle drives
HEIDENHAIN supplies motors for axis and spindle drives as accessories to its controls with integrated inverter.
This brochure provides an overview of all the available motors and contains technical data and mating dimensions.
For commissioning, please request the *Inverter Systems and Motors* Technical Manual.

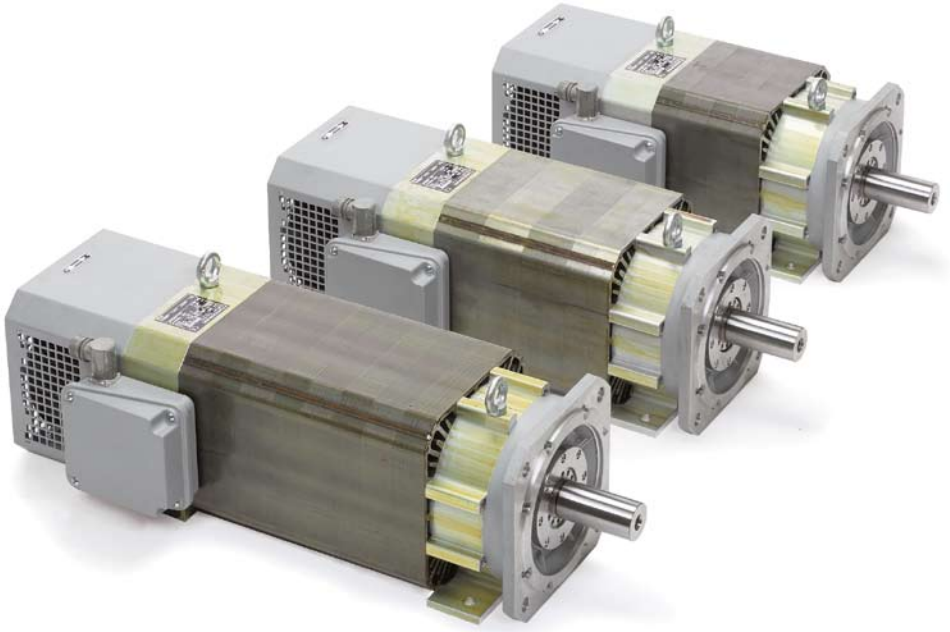

Asynchronous motors for spindles

This catalog supersedes all previous editions, which thereby become invalid. The basis for ordering from HEIDENHAIN is always the catalog edition valid when the contract is made.

Standards (ISO, EN, etc.) apply only where explicitly stated in the catalog.

Expendable parts
HEIDENHAIN motors contain components that are subject to wear, depending on the application and handling. These include in particular the following parts:
- Bearings
- Brakes
- Shaft sealing rings
- Fan

Contents

Synchronous motors
QSY overview

General technical information

Synchronous motors from HEIDENHAIN fulfill all requirements of a numerically controlled machine tool. Some special characteristics include
- an excellent running smoothness,
- an appropriate mass moment of inertia,
- a very good ratio of the rated torque to the stall torque,
- and a low torque ripple.

Specifications
The specifications and the characteristic curves apply to motors mounted without thermal insulation. The temperature of the winding may differ from the maximum permissible ambient temperature of 40 °C by a maximum of 100 K. If the motor is mounted so that it is thermally insulated, it is necessary to reduce the motor torque in order to avoid thermal overloading of the motor.
For motors with ECN 1313 or EQN 1325 absolute rotary encoders, the rated torque is reduced by 10 %.

Speed measurement
Synchronous motors from HEIDENHAIN operate with sinusoidal commutation. An integrated rotary encoder from HEIDENHAIN measures the rotor position and shaft speed. The following versions are available (see *Specifications*):
- ERN 1387 incremental rotary encoder
  or
- ECN 1313 absolute singleturn rotary encoder (only one motor revolution can be evaluated)
  or
- EQN 1325 absolute multiturn rotary encoder

Mechanical life
The service life of the bearings depends on the shaft load and the average shaft speed (see the *Inverter Systems and Motors* Technical Manual).
The nominal bearing service life—which depends on the specific motor and applies for a certain maximum shaft load at an average shaft speed—is 30 000 hours for QSY motors.

EcoDyn motors
Motors of the EcoDyn series are characterized by reduced current consumption together with higher rated torque and a max. permissible rated speed of 3 000 min^{-1}. The following controls are required in order to drive the motors in EcoDyn mode:
- iTNC 530 as of software 340420-06
- iTNC 530 HSCI
- TNC 640
- TNC 620
- MANUALplus 620
- CNC PILOT 4290 as of software 340460-14 and 362796-10

For all other controls, the rated speed is 2 000 min^{-1}.

Electronic ID label
The synchronous motors with ECN 1313 or EQN 1325 feature an electronic ID label to make commissioning and diagnosis easier. The information, such as motor designation, ID number or serial number, stored in this ID label can be read and displayed by the TNCdiag diagnostic software as well as by the internal diagnostic functions of the iTNC 530 (as of software 340422-07 and 340480-07).
The control automatically identifies the motor type and, if required, updates the machine parameters every time it is switched on.

Mechanical data

Design IM B5 (mounting via flange) according to EN 60 034-7
Mounting of the motor
The following screws are recommend for securing the motor:

QSY 55	M5	
QSY 96	M6	
QSY 116	M8	
QSY 130	M8	
QSY 155	M10	
QSY 190	M12 x 40	DIN EN ISO 4017

Flange: Dimensions as per DIN 42 948 and IEC 72
Protection as per EN 60 529
Motor: IP 65
Shaft exit: IP 64
Suitability with regard to gear drive
Only for enclosed gear drives. The shaft is suitable only for dry connection.
Vibration severity
Grade N as per IEC 60 034-14
Radial runout, concentricity and axial runout
Tolerance N as per IEC 60 072-1 (DIN 42 955)
Shaft end
Cylindrical **without keyway** as per IEC 72-1 and DIN 748-1 with centering hole as per ISO 866 BS 5 and thread
Upon request:
Shaft **with keyway** and feather key as per DIN 6885-1
- *QSY 55:* A 3 x 3 x 15
- *QSY 96:* A 6 x 6 x 32
- *QSY 116:* A 8 x 7 x 40
- *QSY 130:* A 8 x 7 x 40
- *QSY 155:* A 10 x 8 x 50
- *QSY 190:* A 10 x 8 x 70

The motors with feather key are flush feather-key balanced as per DIN 6885-1.
Bearings free of maintenance
Holding brake as option
Low backlash ≤ 1°

Thermal specifications

Natural cooling
Temperature monitoring with KTY 84-130 thermistor in the stator winding
Thermal class F

Synchronous motors	Stall torque	Stall current	Rated speed	Recommended inverters[2]				Page
				1-axis module	2-axis module	Compact inverters/axis		
						UR 2xx D UE 2xx B	UE 1xx	
QSY 55 C	0.4 Nm	1.6 A	6000 min^{-1}	UM 111 D	UM 121 D	1 to 4	1 to 4	**6**
QSY 96 A	1.5 Nm	1.5 A	4500 min^{-1}	UM 111 D	UM 121 D	1 to 4	1 to 4	**8**
QSY 96 G	5.2 Nm	5.2 A	4500 min^{-1}	UM 111 D	UM 121 D	1 to 4	1 to 4	
QSY 116 C	5.2 Nm	3.3 A	3000 min^{-1}	UM 111 D	UM 121 D	1 to 4	1 to 4	**10**
QSY 116 E	7.2 Nm	4.8 A	3000 min^{-1}	UM 111 D	UM 121 D	1 to 4	4	
QSY 116 J	10.0 Nm	6.8 A	3000 min^{-1}	UM 111 D	UM 121 D	1 to 4	4	
QSY 116 J EcoDyn	10.0 Nm	5.0 A	3000 min^{-1}	UM 111 D	UM 121 D	1 to 4	4	
QSY 130 C EcoDyn	6.0 Nm	3.0 A	3000 min^{-1}	UM 111 D	UM 121 D	1 to 4	1 to 4	**12**
QSY 130 E EcoDyn	9.0 Nm	4.5 A	3000 min^{-1}	UM 111 D	UM 121 D	1 to 4	1 to 4	
QSY 155 B	13.0 Nm	9.1 A	3000 min^{-1}	UM 111 BD	UM 121 BD	4	–	**14**
QSY 155 C	17.7 Nm	11.8 A	3000 min^{-1}	UM 111 BD	UM 121 BD	4	–	
QSY 155 D	21.6 Nm	14.6 A	3000 min^{-1}	UM 111 BD	UM 121 BD	4	–	
QSY 155 F	26.1 Nm	18.0 A	3000 min^{-1}	UM 112 D	UM 122 D	4[1]	–	
QSY 155 B EcoDyn	13.0 Nm	6.5 A	3000 min^{-1}	UM 111 D	UM 121 D	1 to 4	–	**16**
QSY 155 C EcoDyn	17.7 Nm	8.5 A	3000 min^{-1}	UM 111 BD	UM 121 BD	4	–	
QSY 155 D EcoDyn	21.6 Nm	10.6 A	3000 min^{-1}	UM 111 BD	UM 121 BD	4	–	
QSY 155 F EcoDyn	26.1 Nm	12.8 A	3000 min^{-1}	UM 111 BD	UM 121 BD	4	–	
QSY 190 C EcoDyn	28.0 Nm	14.0 A	3000 min^{-1}	UM 111 BD	UM 121 BD	4	–	**18**
QSY 190 D EcoDyn	38.0 Nm	18.1 A	3000 min^{-1}	UM 112 D	UM 122 D	4[1]	–	
QSY 190 F EcoDyn	47.6 Nm	22.7 A	3000 min^{-1}	UM 112 D	UM 122 D	4[1]	–	
QSY 190 K EcoDyn	62.5 Nm	29.8 A	3000 min^{-1}	UM 113 D	–	–	–	

[1] Only UE 242 B, UR 242 D
[2] The maximum acceleration of the motor might not be achievable with the recommended inverters. If necessary, a more powerful power module must be selected.

Synchronous motors
QSY 55 series

Feed motors with 3 pole pairs
Stall torque 0.4 Nm
With incremental rotary encoder

Motor	**QSY 55 C**	
Rated voltage U_N	110 V	
Rated power output P_N	0.2 kW	
Rated shaft speed n_N	6000 min^{-1}	
Rated torque M_N 1)	0.33 Nm	
Rated current I_N 1)	1.4 A	
Stall torque M_0 1)	0.4 Nm	
Stall current I_0 1)	1.6 A	
Max. speed n_{max}	8000 min^{-1}	
Max. torque M_{max} 2)	1.4 Nm	
Max. current I_{max} 2)	6.15 A	
Weight m	1.4 kg	1.6 kg
Rotor inertia J	0.190 $kgcm^2$	0.206 $kgcm^2$
Brake Rated voltage U_{Br} Rated current I_{Br} Holding torque M_{Br}	**Without** – – –	**With** 24 V DC 0.3 A 1.0 Nm
ID For motor with ERN 1185	524348-03	524348-04

1) At 100 K 2) Max. 200 ms

Rotatable connections

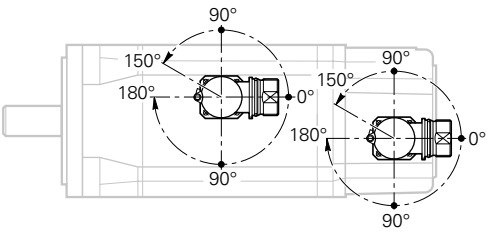

Power connector

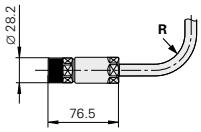

Encoder connector

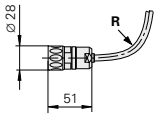

For R, see page 35

QSY 55 C Without brake

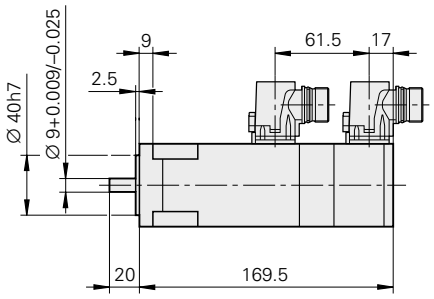

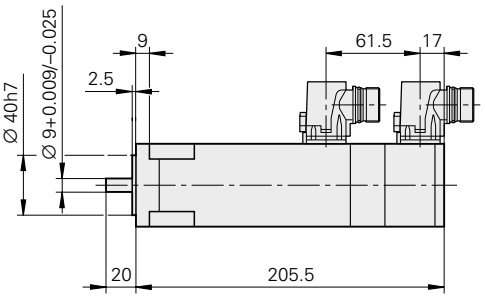

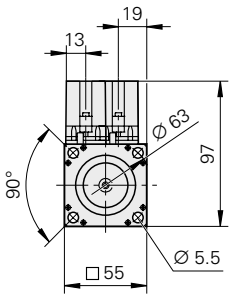

mm

Tolerancing ISO 8015
ISO 2768 - m H
< 6 mm: ±0.2 mm

Synchronous motors
QSY 96 series

Feed motors with 3 pole pairs
Stall torque 1.5 Nm and 5.2 Nm
Choice of incremental or absolute rotary encoder

Motor	**QSY 96A**		**QSY 96G**	
Rated voltage U_N	310 V/*308 V*		291 V/*290 V*	
Rated power output P_N	0.5 kW/*0.45 kW*		1.4 kW/*1.3 kW*	
Rated shaft speed n_N	4500 min^{-1}			
Rated torque M_N 1)	1.05 Nm/*0.95 Nm*		3.0 Nm/*2.7 Nm* at 4500 min^{-1}	
Rated current I_N 1)	1.1 A/*1.0 A*		3.3 A/*3.0 A*	
Stall torque M_0 1)	1.5 Nm		5.2 Nm	
Stall current I_0 1)	1.5 A		5.2 A	
Max. speed n_{max}	6000 min^{-1}			
Max. torque M_{max} 2)	5.5 Nm		22 Nm	
Max. current I_{max} 2)	6.3 A		25.4 A	
Weight m	3.6 kg	4.5 kg	7.2 kg	8.1 kg
Rotor inertia J	1.8 $kgcm^2$	2.1 $kgcm^2$	6.3 $kgcm^2$	6.6 $kgcm^2$
Brake	**Without**	**With**	**Without**	**With**
Rated voltage U_{Br}	–	24 V DC	–	24 V DC
Rated current I_{Br}	–	0.5 A	–	0.5 A
Holding torque M_{Br}	–	5.0 Nm	–	5.0 Nm
ID				
For motor with ERN 1387	344512-03	344512-04	339875-03	339875-04
For motor with ECN 1313	344512-83	344512-84	339875-83	339875-84
For motor with EQN 1325	344512-53	344512-54	339875-53	339875-54

1) At 100 K 2) Max. 200 ms
In italics: Data for motors with ECN 1313 or EQN 1325 (rated torque reduced by 10 %)

Rotatable connections

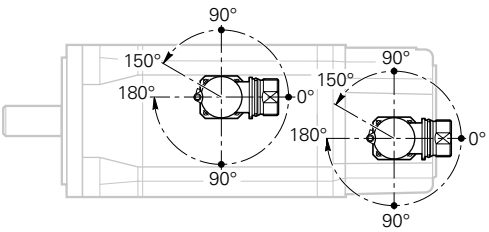

Power connector

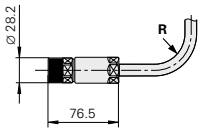

Encoder connector

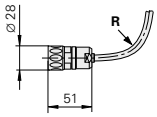

For R, see page 35

QSY 96A Without brake

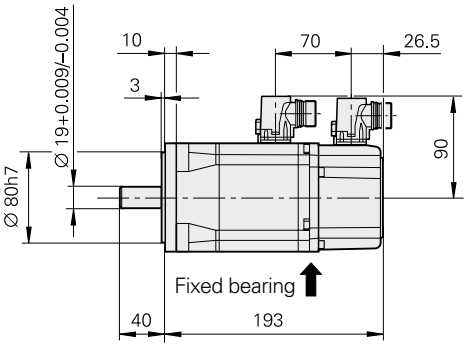

With brake

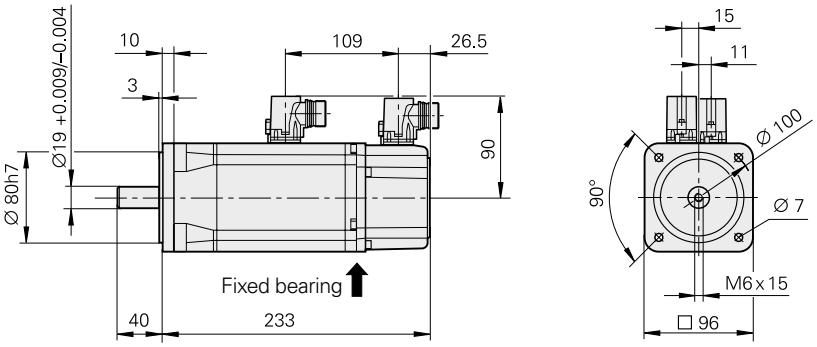

QSY 96G Without brake

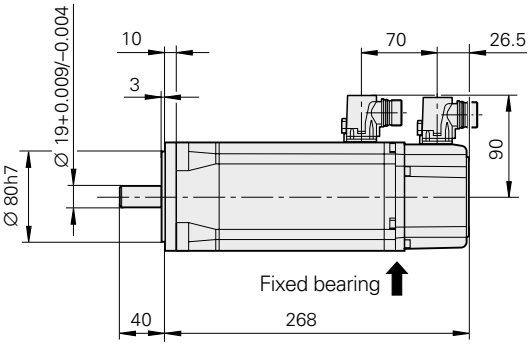

With brake

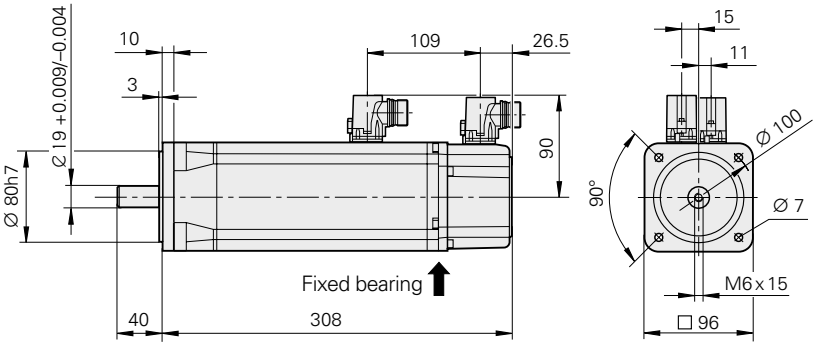

mm

Tolerancing ISO 8015
ISO 2768 - m H
< 6 mm: ±0.2 mm

Synchronous motors
QSY 116 series

Feed motors with 3 pole pairs
Stall torque of 5.2 Nm to 10 Nm
Choice of incremental or absolute rotary encoder

Motor	**QSY 116C**		**QSY 116E**		**QSY 116J**		**QSY 116J EcoDyn**	
Rated voltage U_N	315 V/*311 V*		302 V/*299 V*		290 V/*288 V*		408 V/*405 V*	
Rated power output P_N	1.45 kW/*1.30 kW*		1.85 kW/*1.67 kW*		2.42 kW/*2.18 kW*		2.64 kW/*2.38 kW*	
Rated shaft speed n_N	3000 min^{-1}						3000 min^{-1} [3]	
Rated torque M_N [1]	4.6 Nm/*4.1 Nm*		5.9 Nm/*5.3 Nm*		7.7 Nm/*6.9 Nm*		8.4 Nm/*7.6 Nm*	
Rated current I_N [1]	3.3 A/*3.0 A*		4.1 A/*3.7 A*		5.4 A/*4.8 A*		4.3 A/*3.9 A*	
Stall torque M_0 [1]	5.2 Nm		7.2 Nm		10.0 Nm		10.0 Nm	
Stall current I_0 [1]	3.3 A		4.8 A		6.8 A		5.0 A	
Max. speed n_{max}	5400 min^{-1}						4200 min^{-1} [3]	
Max. torque M_{max} [2]	16 Nm		25 Nm		41 Nm		41 Nm	
Max. current I_{max} [2]	12.7 A		19.0 A		32.6 A		23.0 A	
Weight m	6.9 kg	7.8 kg	8.6 kg	9.5 kg	12.0 kg	13.3 kg	12.0 kg	13.3 kg
Rotor inertia J	7.5 $kgcm^2$	7.9 $kgcm^2$	9.9 $kgcm^2$	10.3 $kgcm^2$	15.0 $kgcm^2$	15.4 $kgcm^2$	15.0 $kgcm^2$	15.4 $kgcm^2$
Brake	**Without**	**With**	**Without**	**With**	**Without**	**With**	**Without**	**With**
Rated voltage U_{Br}	–	24 V DC	–	24 V DC	–	24 V DC	–	24 V DC
Rated current I_{Br}	–	0.6 A	–	0.6 A	–	0.85 A	–	0.85 A
Holding torque M_{Br}	–	13.5 Nm	–	13.5 Nm	–	13.5 Nm	–	13.5 Nm
ID								
For motor with ERN 1387	339876-03	339876-04	339877-03	339877-04	339878-03	339878-04	339878-13	339878-14
For motor with ECN 1313	339876-83	339876-84	339877-83	339877-84	–	–	339878-83	339878-84
For motor with EQN 1325	339876-53	339876-54	339877-53	339877-54	339878-53	339878-54	339878-63	339878-64

[1] At 100 K [2] Max. 200 ms [3] In EcoDyn mode
In italics: Data for motors with ECN 1313 or EQN 1325 (rated torque reduced by 10 %)

Rotatable connections

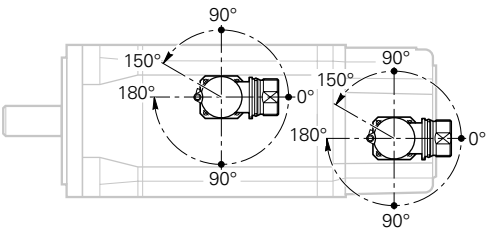

Power connector

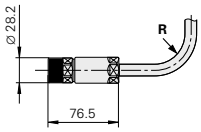

Encoder connector

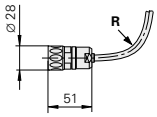

For R, see page 35

mm

Tolerancing ISO 8015
ISO 2768 - m H
< 6 mm: ±0.2 mm

QSY 116C Without brake

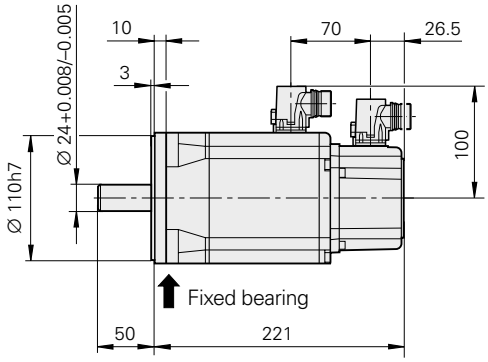

With brake

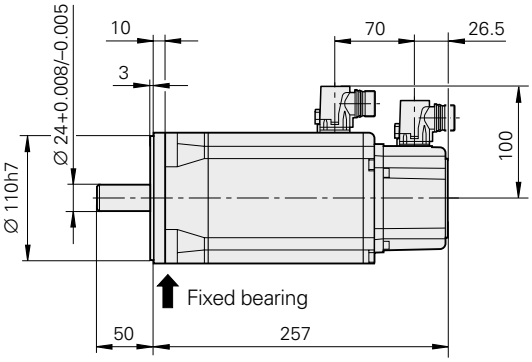

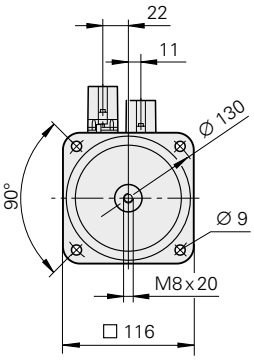

QSY 116E Without brake

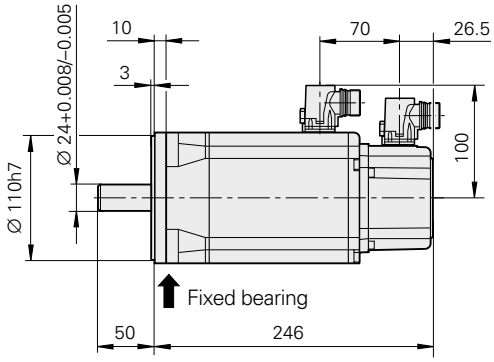

With brake

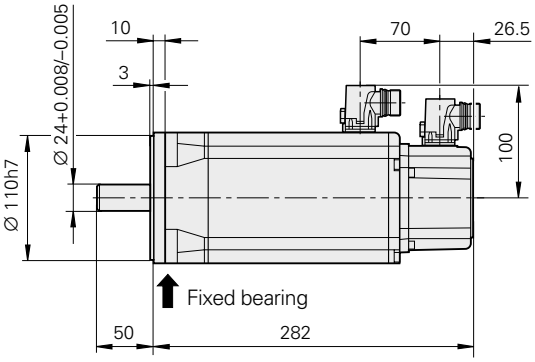

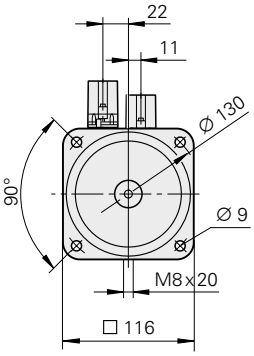

QSY 116J
QSY 116J EcoDyn Without brake

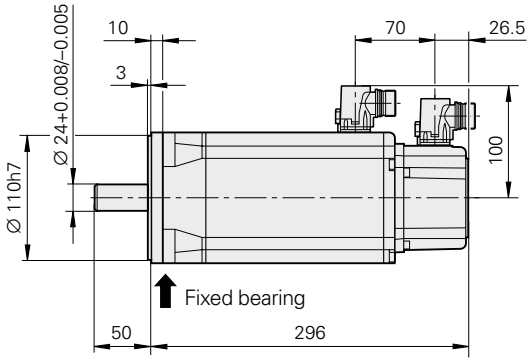

With brake

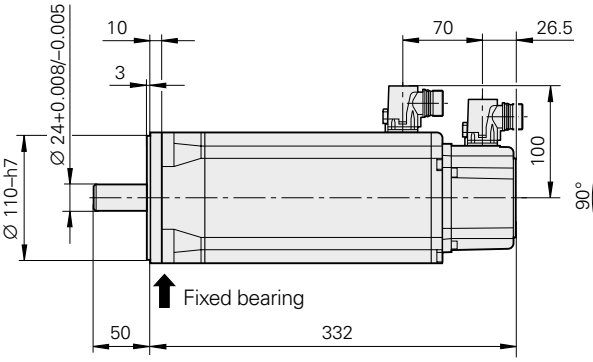

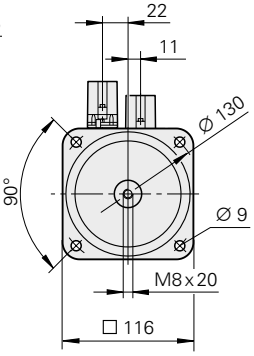

Synchronous motors
QSY 130 EcoDyn series

Feed motors with 4 pole pairs
Stall torque 6 Nm and 9 Nm
Choice of incremental or absolute rotary encoder

Motor	**QSY 130C EcoDyn**		**QSY 130E EcoDyn**	
Rated voltage U_N	415 V/*411 V*		407 V/*403 V*	
Rated power output P_N	1.6 kW/*1.5 kW*		2.3 kW/*2.1 kW*	
Rated shaft speed n_N	3000 min^{-1} (in EcoDyn mode)			
Rated torque M_N 1)	5.2 Nm/*4.7 Nm*		7.4 Nm/*6.7 Nm*	
Rated current I_N 1)	2.7 A/*2.4 A*		3.8 A/*3.4 A*	
Stall torque M_0 1)	6.0 Nm		9.0 Nm	
Stall current I_0 1)	3.0 A		4.5 A	
Max. speed n_{max}	4200 min^{-1} (in EcoDyn mode)			
Max. torque M_{max} 2)	16 Nm		23 Nm	
Max. current I_{max} 2)	8.6 A		12.7 A	
Weight m	7.9 kg	8.8 kg	9.7 kg	10.6 kg
Rotor inertia J	16.0 $kgcm^2$	16.4 $kgcm^2$	21.0 $kgcm^2$	21.4 $kgcm^2$
Brake Rated voltage U_{Br} Rated current I_{Br} Holding torque M_{Br}	**Without** – – –	**With** 24 V DC 0.6 A 13.5 Nm	**Without** – – –	**With** 24 V DC 0.6 A 13.5 Nm
ID For motor with ERN 1387 For motor with ECN 1313 For motor with EQN 1325	 389053-13 389053-83 389053-63	 389053-14 389053-84 389053-64	 388422-13 388422-83 388422-63	 388422-14 388422-84 388422-64

1) At 100 K 2) Max. 200 ms
In italics: Data for motors with ECN 1313 or EQN 1325 (rated torque reduced by 10 %)

Rotatable connections

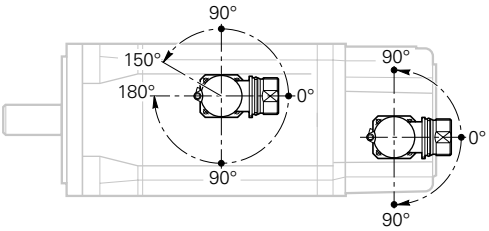

Power connector

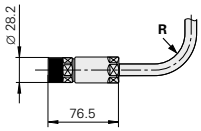

Encoder connector

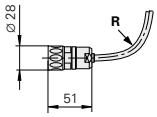

For R, see page 35

QSY 130C Without brake

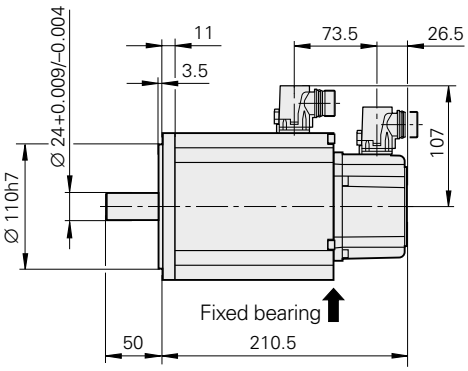

With brake

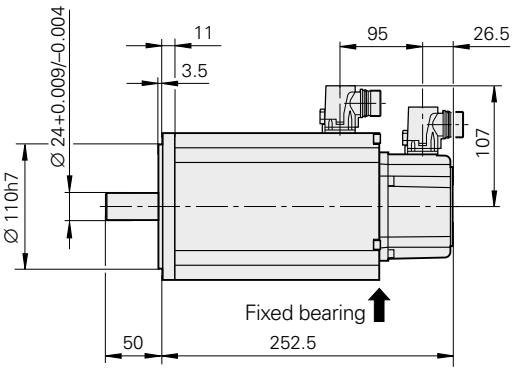

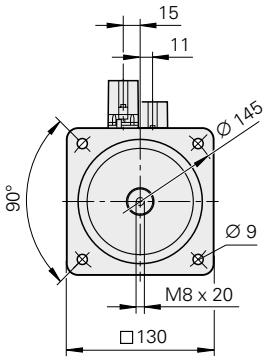

QSY 130E Without brake

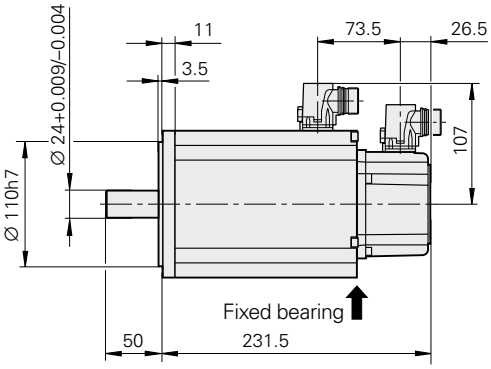

With brake

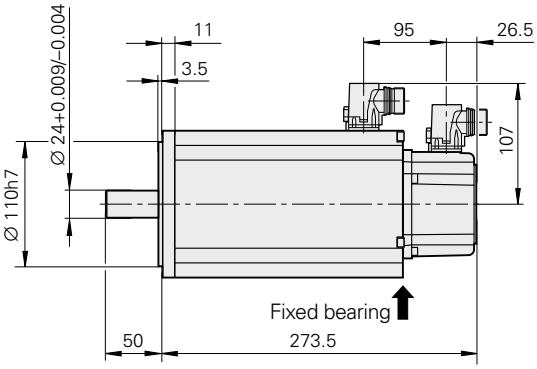

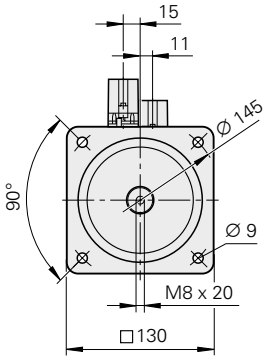

mm

Tolerancing ISO 8015
ISO 2768 - m H
< 6 mm: ±0.2 mm

Synchronous motors
QSY 155 series

Feed motors with 4 pole pairs
Stall torque of 13 Nm to 26.1 Nm
Choice of incremental or absolute rotary encoder

Motor	**QSY 155 B**		**QSY 155 C**		**QSY 155 D**		**QSY 155 F**	
Rated voltage U_N	298 V/*295 V*		294 V/*291 V*		293 V/*291 V*		289 V/*287 V*	
Rated power output P_N	2.9 kW/*2.6 kW*		3.9 kW/*3.5 kW*		4.6 kW/*4.1 kW*		5.2 kW/*4.7 kW*	
Rated shaft speed n_N	3000 min^{-1}							
Rated torque M_N 1)	9.2 Nm/*8.3 Nm*		12.5 Nm/*11.3 Nm*		14.8 Nm/*13.3 Nm*		16.7 Nm/*15.0 Nm*	
Rated current I_N 1)	6.9 A/*6.2 A*		8.7 A/*7.8 A*		10.6 A/*9.5 A*		12.0 A/*10.8 A*	
Stall torque M_0 1)	13.0 Nm		17.7 Nm		21.6 Nm		26.1 Nm	
Stall current I_0 1)	9.1 A		11.8 A		14.6 A		18.0 A	
Max. speed n_{max}	5000 min^{-1}							
Max. torque M_{max} 2)	39 Nm		52 Nm		64 Nm		90 Nm	
Max. current I_{max} 2)	29.7 A		38.9 A		49.5 A		68.6 A	
Weight m	15.0 kg	18.0 kg	17.5 kg	20.5 kg	20.0 kg	23.0 kg	25.0 kg	28.0 kg
Rotor inertia J	33 $kgcm^2$	35 $kgcm^2$	43 $kgcm^2$	45 $kgcm^2$	54 $kgcm^2$	56 $kgcm^2$	75 $kgcm^2$	77 $kgcm^2$
Brake	**Without**	**With**	**Without**	**With**	**Without**	**With**	**Without**	**With**
Rated voltage U_{Br}	–	24 V DC	–	24 V DC	–	24 V DC	–	24 V DC
Rated current I_{Br}	–	1.04 A	–	1.04 A	–	1.04 A	–	1.04 A
Holding torque M_{Br}	–	40 Nm	–	40 Nm	–	40 Nm	–	40 Nm
ID								
For motor with ERN 1387	339880-03	339880-04	365308-03	365308-04	339881-03	339881-04	339882-03	339882-04
For motor with EQN 1325	339880-53	339880-54	365308-53	365308-54	339881-53	339881-54	339882-53	339882-54

1) At 100 K 2) Max. 200 ms
In italics: Data for motors with EQN 1325 (rated torque reduced by 10 %)

Rotatable connections

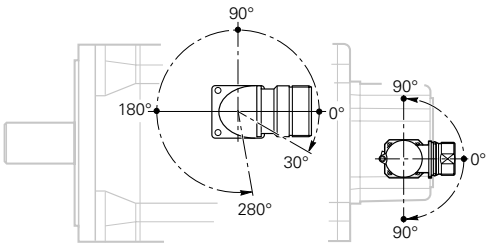

Power connector

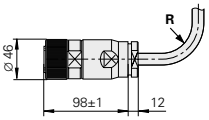

Encoder connector

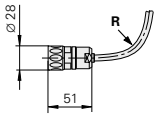

For R, see page 35

mm

Tolerancing ISO 8015
ISO 2768 - m H
< 6 mm: ±0.2 mm

QSY 155 B Without brake

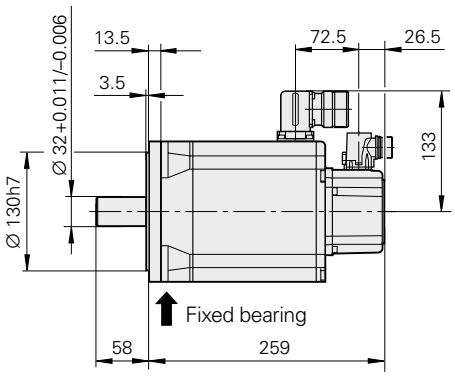

With brake

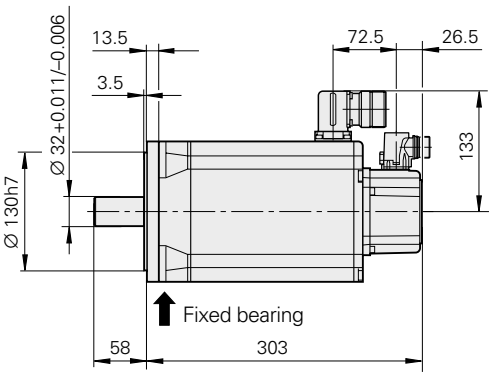

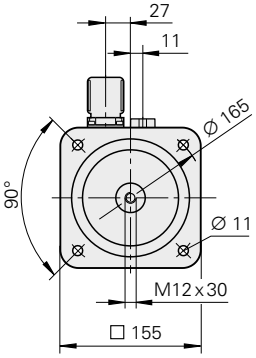

QSY 155 C Without brake

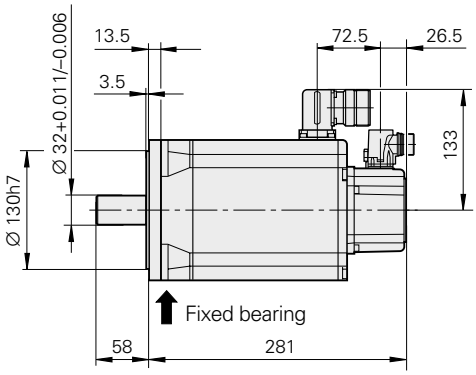

With brake

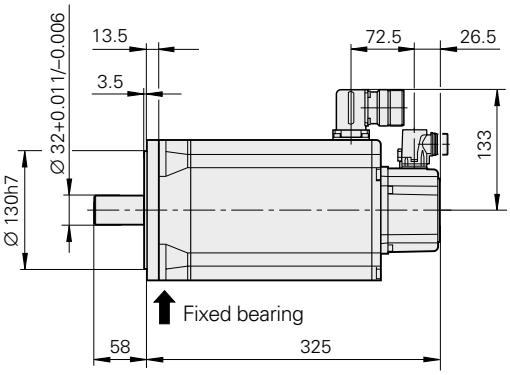

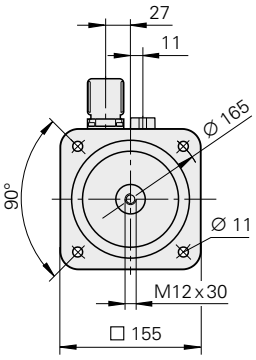

QSY 155 D Without brake

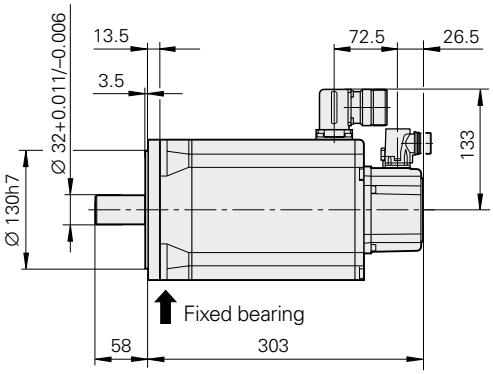

With brake

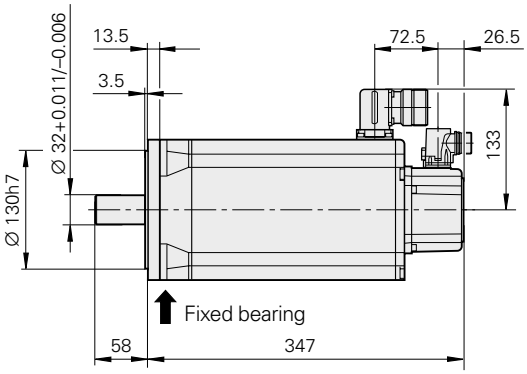

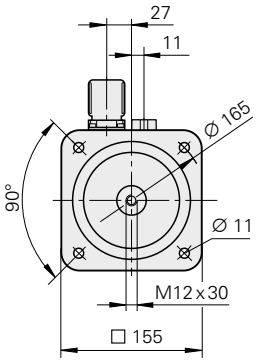

QSY 155 F Without brake

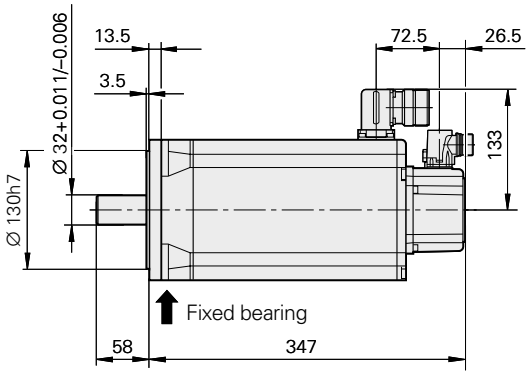

With brake

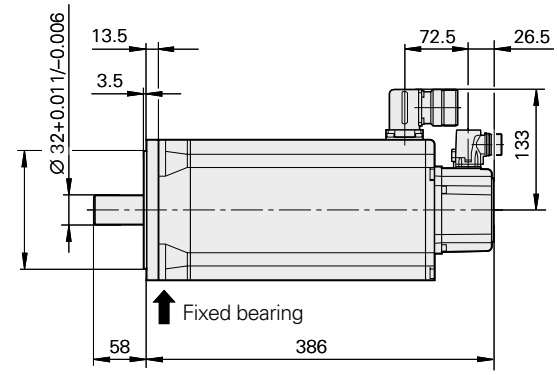

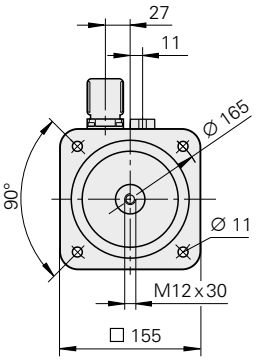

Synchronous motors
QSY 155 EcoDyn series

Feed motors with 4 pole pairs
Stall torque of 13 Nm to 26.1 Nm
Choice of incremental or absolute rotary encoder

Motor	**QSY 155 B EcoDyn**		**QSY 155 C EcoDyn**		**QSY 155 D EcoDyn**		**QSY 155 F EcoDyn**	
Rated voltage U_N	417 V/*412 V*		420 V/*415 V*		412 V/*407 V*		399 V/*397 V*	
Rated power output P_N	3.5 kW/*3.1 kW*		5.0 kW/*4.5 kW*		5.7 kW/*5.1 kW*		6.0 kW/*5.4 kW*	
Rated shaft speed n_N	3000 min^{-1} (in EcoDyn mode)							
Rated torque M_N [1)]	11.0 Nm/*9.9 Nm*		16.0 Nm/*14.4 Nm*		18.1 Nm/*16.3 Nm*		19.2 Nm/*17.3 Nm*	
Rated current I_N [1)]	5.6 A/*5.0 A*		8.2 A/*7.4 A*		9.1 A/*8.2 A*		9.8 A/*8.8 A*	
Stall torque M_0 [1)]	13.0 Nm		17.7 Nm		21.6 Nm		26.1 Nm	
Stall current I_0 [1)]	6.5 A		8.5 A		10.6 A		12.8 A	
Max. speed n_{max}	4200 min^{-1} (in EcoDyn mode)							
Max. torque M_{max} [2)]	39 Nm		52 Nm		64 Nm		90 Nm	
Max. current I_{max} [2)]	21.2 A		27.6 A		35.0 A		49.5 A	
Weight m	15.0 kg	18.0 kg	17.5 kg	20.5 kg	20.0 kg	23.0 kg	25.0 kg	28.0 kg
Rotor inertia J	33 $kgcm^2$	35 $kgcm^2$	43 $kgcm^2$	45 $kgcm^2$	54 $kgcm^2$	56 $kgcm^2$	75 $kgcm^2$	77 $kgcm^2$
Brake	**Without**	**With**	**Without**	**With**	**Without**	**With**	**Without**	**With**
Rated voltage U_{Br}	–	24 V DC	–	24 V DC	–	24 V DC	–	24 V DC
Rated current I_{Br}	–	1.04 A	–	1.04 A	–	1.04 A	–	1.04 A
Holding torque M_{Br}	–	40 Nm	–	40 Nm	–	40 Nm	–	40 Nm
ID								
For motor with ERN 1387	339880-13	339880-14	365308-13	365308-14	339881-13	339881-14	339882-13	339882-14
For motor with ECN 1313	339880-83	339880-84	365308-83	365308-84	339881-83	339881-84	339882-83	339882-84
For motor with EQN 1325	339880-63	339880-64	365308-63	365308-64	339881-63	339881-64	339882-63	339882-64

[1)] At 100 K [2)] Max. 200 ms
In italics: Data for motors with ECN 1313 or EQN 1325 (rated torque reduced by 10 %)

Rotatable connections

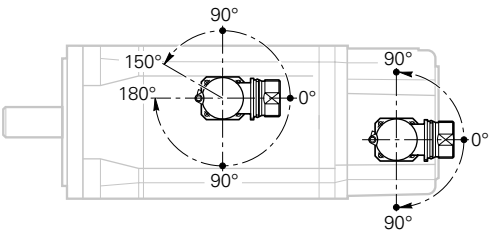

Power connector for QSY 155 B/C/D EcoDyn

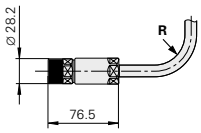

Encoder connector

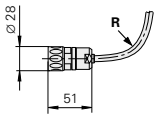

Power connector for QSY 155 F EcoDyn

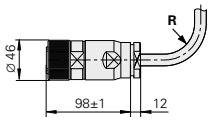

For R, see page 35

mm

Tolerancing ISO 8015
ISO 2768 - m H
< 6 mm: ±0.2 mm

QSY 155 B EcoDyn Without brake

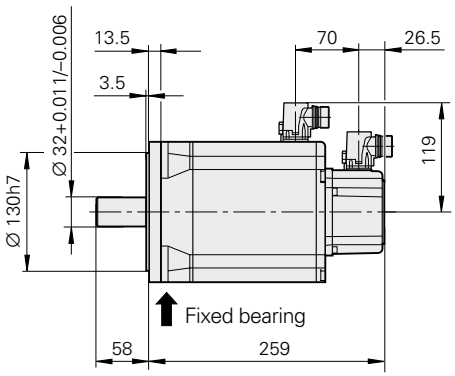

With brake

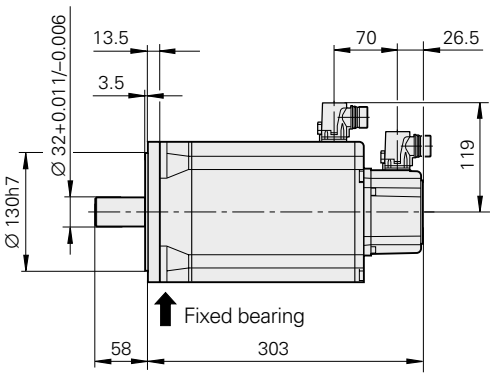

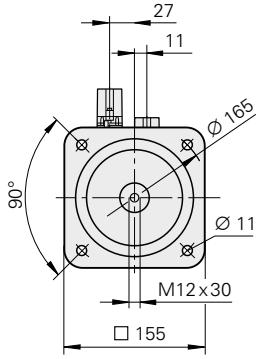

QSY 155 C EcoDyn Without brake

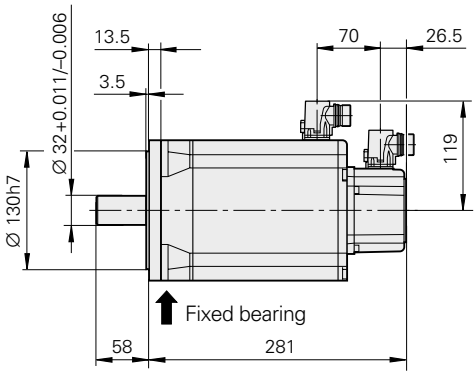

With brake

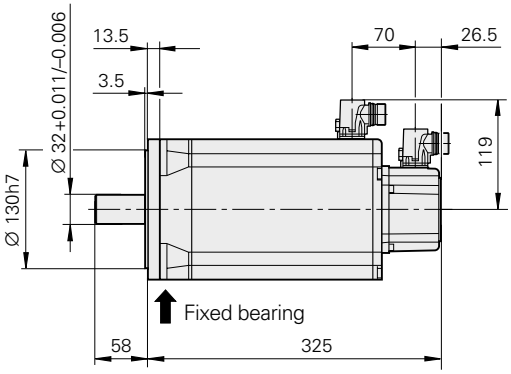

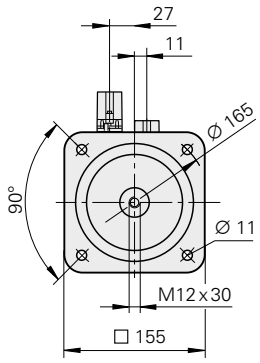

QSY 155 D EcoDyn Without brake

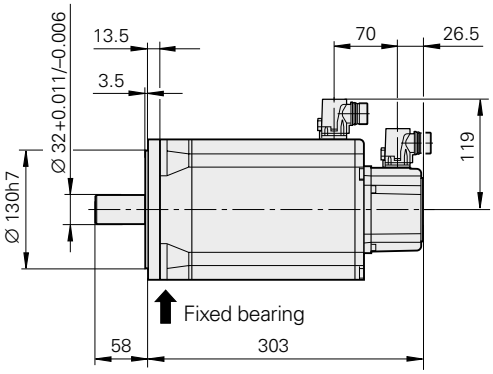

With brake

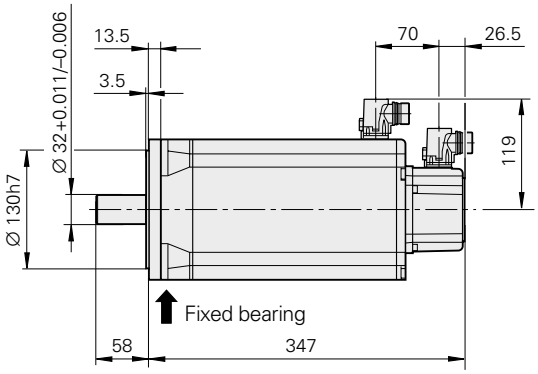

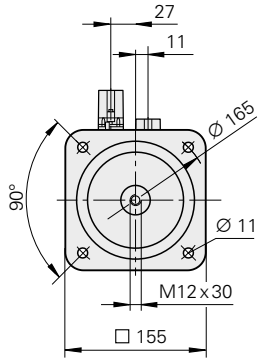

QSY 155 F EcoDyn Without brake

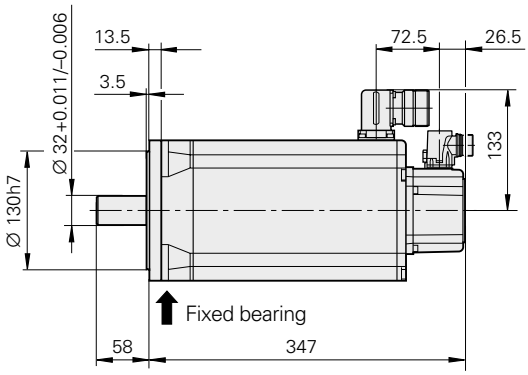

With brake

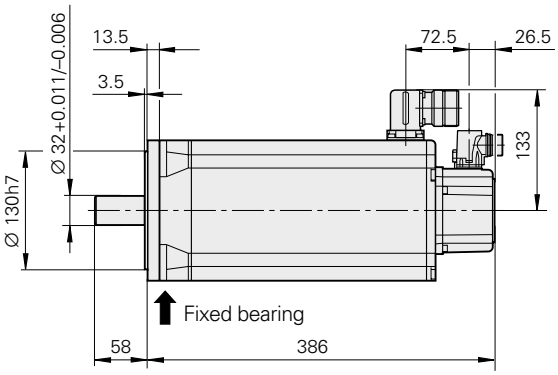

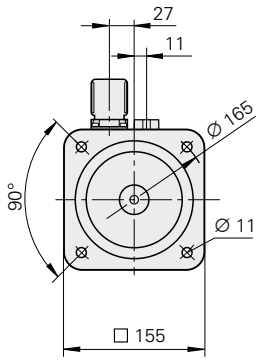

Synchronous motors
QSY 190 EcoDyn series

Feed motors with 4 pole pairs
Stall torque of 28 Nm to 62.5 Nm
Choice of incremental or absolute rotary encoder

Motor	**QSY 190C EcoDyn**		**QSY 190D EcoDyn**		**QSY 190F EcoDyn**		**QSY 190K EcoDyn**	
Rated voltage U_N	427 V/*420 V*		421 V/*412 V*		408 V/*404 V*		399 V/*396 V*	
Rated power output P_N	7.2 kW/*6.5 kW*		9.6 kW/*8.6 kW*		9.9 kW/*8.9 kW*		12.2 kW/*11.0 kW*	
Rated shaft speed n_N	3000 min^{-1} (in EcoDyn mode)							
Rated torque M_N 1)	23.0 Nm/*20.7 Nm*		30.6 Nm/*27.5 Nm*		31.5 Nm/*28.4 Nm*		39.0 Nm/*35.1 Nm*	
Rated current I_N 1)	11.8 A/*10.6 A*		14.4 A/*13.0 A*		15.0 A/*13.5 A*		20.2 A/*18.2 A*	
Stall torque M_0 1)	28.0 Nm		38.0 Nm		47.6 Nm		62.5 Nm	
Stall current I_0 1)	14.0 A		18.1 A		22.7 A		29.8 A	
Max. speed n_{max}	3900 min^{-1} (in EcoDyn mode)							
Max. torque M_{max} 2)	85 Nm		107 Nm		150 Nm		240 Nm	
Max. current I_{max} 2)	50.2 A		62.9 A		88.4 A		134.3 A	
Weight m	29.0 kg	37.0 kg	33.5 kg	41.5 kg	42.5 kg	50.5 kg	61 kg	69.0 kg
Rotor inertia J	106 $kgcm^2$	115 $kgcm^2$	133 $kgcm^2$	142 $kgcm^2$	190 $kgcm^2$	199 $kgcm^2$	290 $kgcm^2$	299 $kgcm^2$
Brake	**Without**	**With**	**Without**	**With**	**Without**	**With**	**Without**	**With**
Rated voltage U_{Br}	–	24 V DC	–	24 V DC	–	24 V DC	–	24 V DC
Rated current I_{Br}	–	1.38 A	–	1.38 A	–	1.38 A	–	1.38 A
Holding torque M_{Br}	–	70 Nm	–	70 Nm	–	70 Nm	–	70 Nm
ID								
For motor with ERN 1387	392023-13	392023-14	392024-13	392024-14	388244-13	388244-14	392025-13	392025-14
For motor with ECN 1313	392023-83	392023-84	392024-83	392024-84	388244-83	388244-84	392025-83	392025-84
For motor with EQN 1325	392023-63	392023-64	392024-63	392024-64	388244-63	388244-64	392025-63	392025-64

1) At 100 K 2) Max. 200 ms
In italics: Data for motors with ECN 1313 or EQN 1325 (rated torque reduced by 10 %)

Rotatable connections

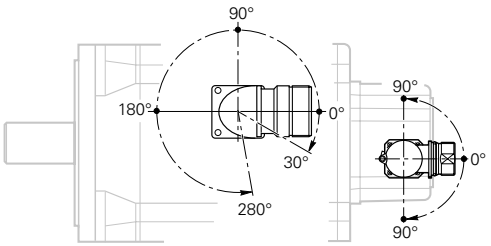

Power connector

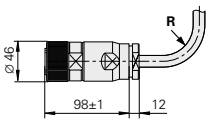

Encoder connector

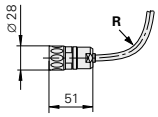

For R, see page 35

mm

Tolerancing ISO 8015
ISO 2768 - m H
< 6 mm: ±0.2 mm

QSY 190 C EcoDyn Without brake

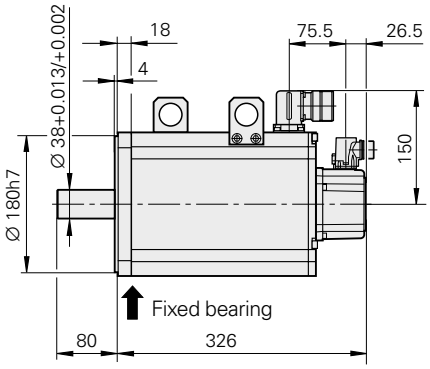

With brake

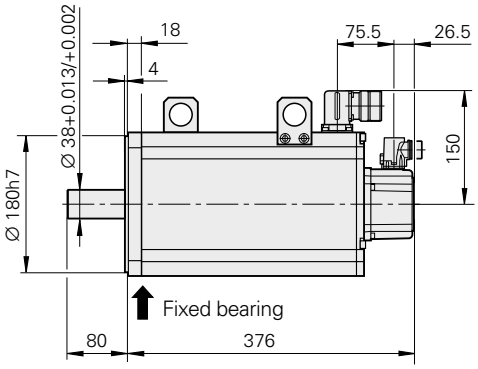

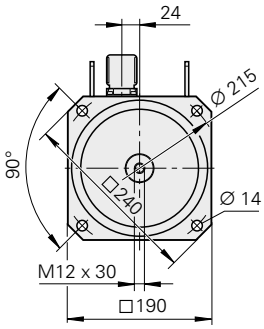

QSY 190 D EcoDyn Without brake

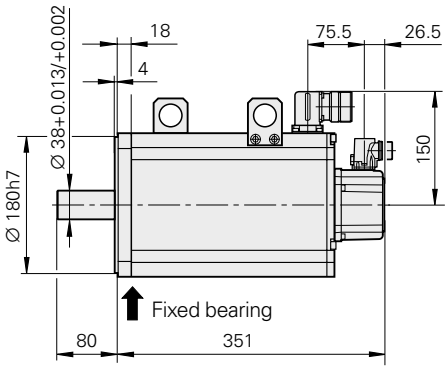

With brake

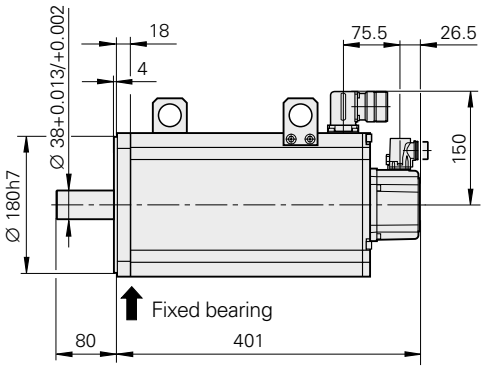

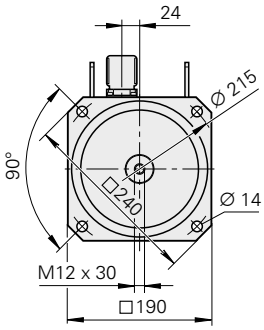

QSY 190 F EcoDyn Without brake

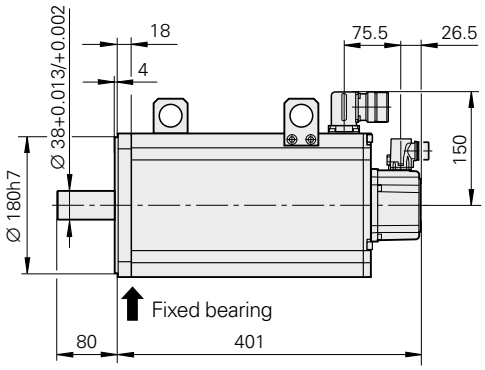

With brake

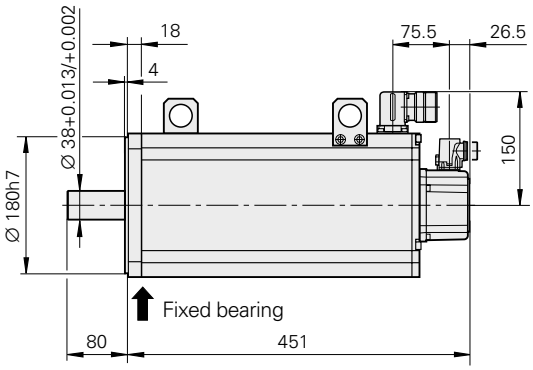

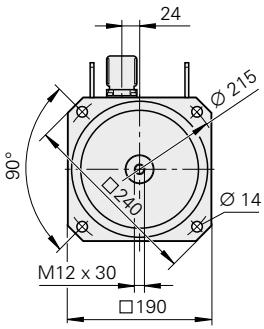

QSY 190 K EcoDyn Without brake

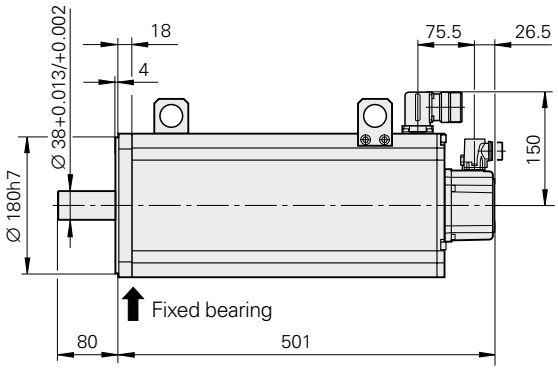

With brake

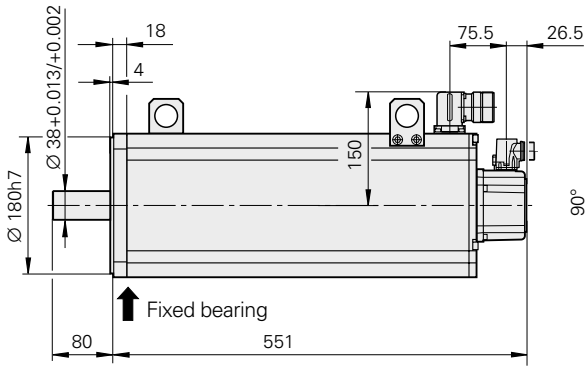

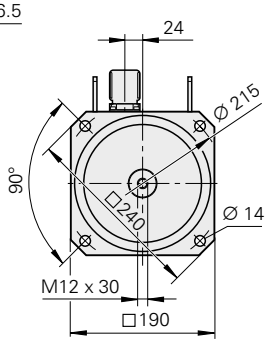

Synchronous motors
Torque characteristics

- - - - - Characteristic curve according to the specifications
——— Measured characteristic curve of one motor

*) Characteristic curve at maximum motor current
**) Characteristic curve when using compact inverters

QSY 55C

*) M_{max} = 1.4 Nm at I_{max} = 6.15 A_{eff}

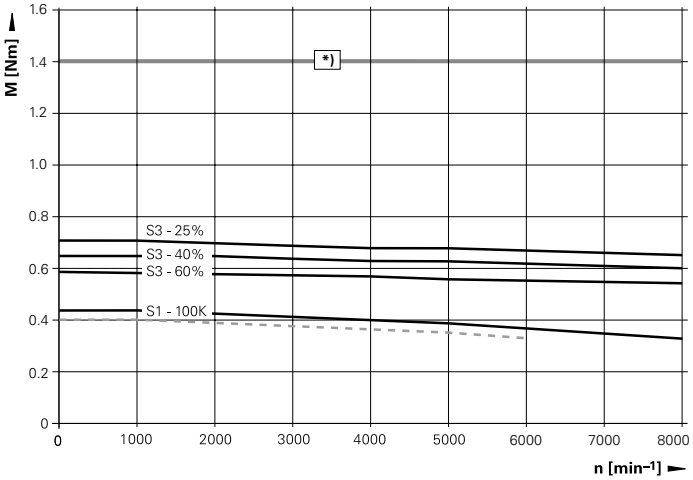

QSY 96A

*) M_{max} = 5.5 Nm at I_{max} = 6.3 A_{eff}

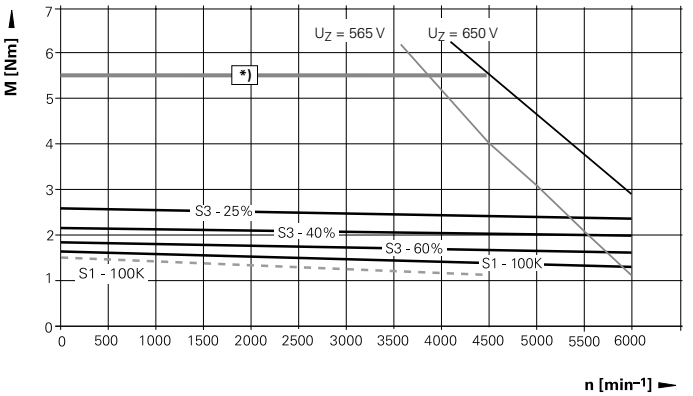

QSY 96G

*) M_{max} = 22 Nm at I_{max} = 25.4 A_{eff}
**) M_{max} = 14 Nm at I_{max} = 15 A_{eff}

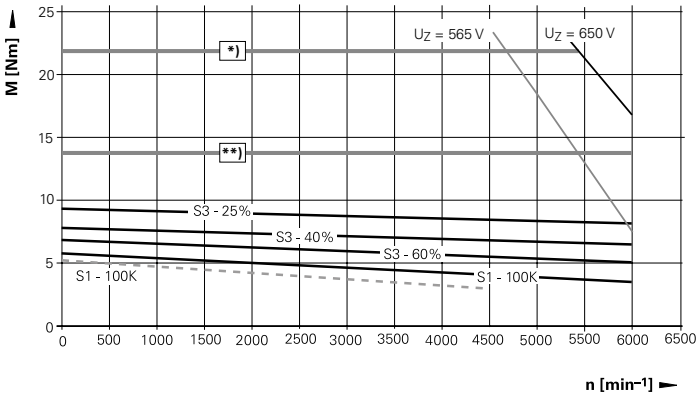

QSY 116C

*) M_{max} = 16 Nm at I_{max} = 12.7 A_{eff}

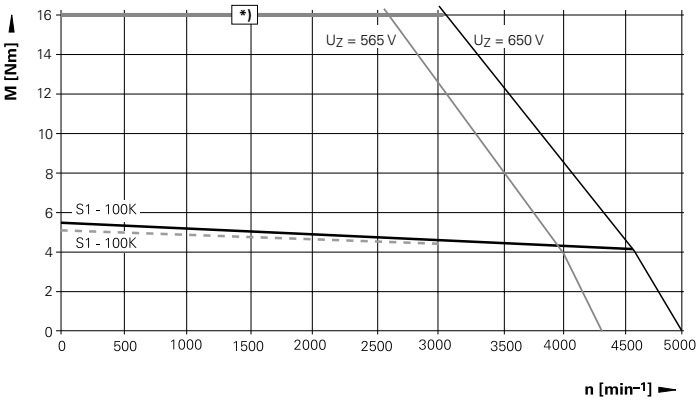

QSY 116E

*) M_{max} = 25 Nm at I_{max} = 19 A_{eff}
**) M_{max} = 21 Nm at I_{max} = 15 A_{eff}

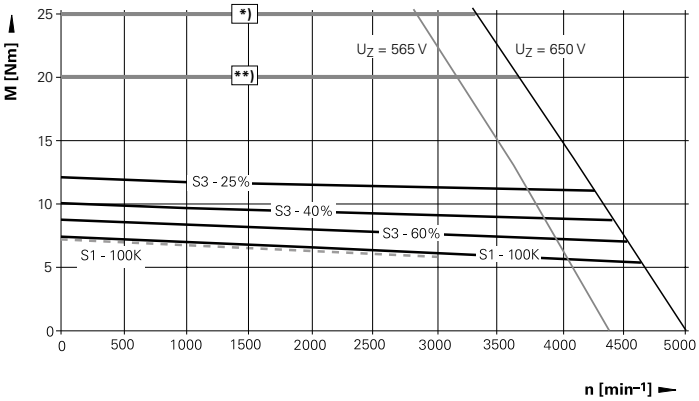

QSY 116J

*) M_{max} = 41 Nm at I_{max} = 32.6 A_{eff}
**) M_{max} = 21 Nm at I_{max} = 15 A_{eff}

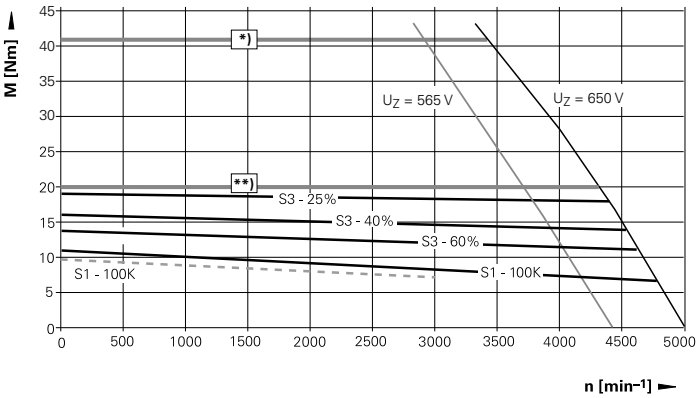

QSY 116J EcoDyn

*) M_{max} = 41 Nm at I_{max} = 23 A_{eff}
**) M_{max} = 29 Nm at I_{max} = 15 A_{eff}

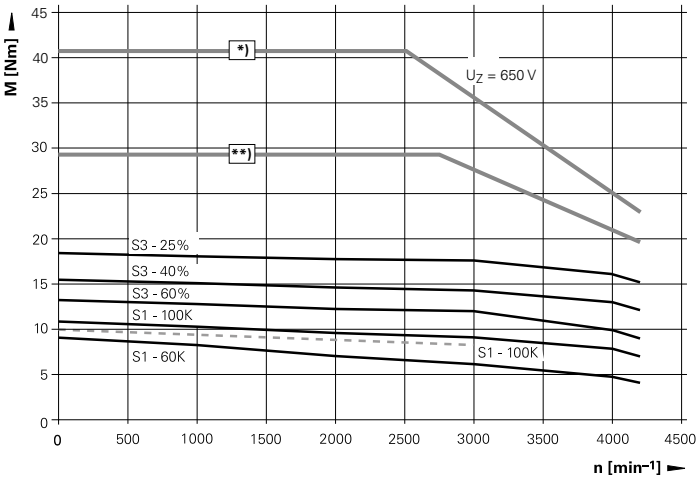

Notes

- **The characteristic curves apply to motors with ERN 1387.**
- **S3 mode**
  Cycle duration 10 min.
  In the rest period the motor must be stopped and disconnected from power.

QSY 130 C EcoDyn

*) M_{max} = 16 Nm at I_{max} = 8.6 A_{eff}
**) M_{max} = 14.5 Nm at I_{max} = 7.5 A_{eff}

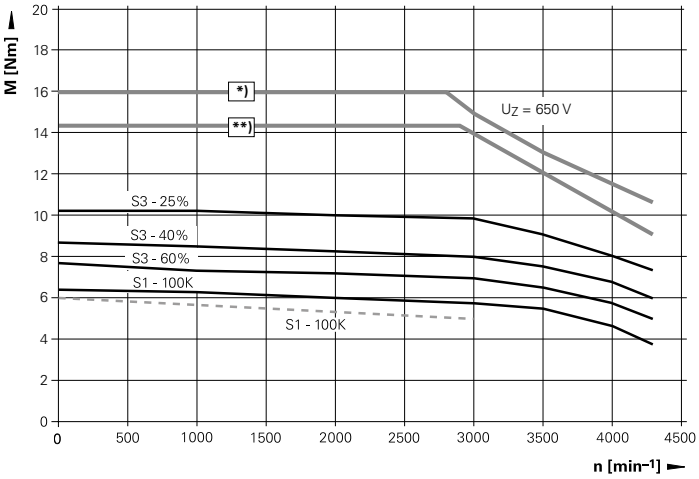

QSY 130 E EcoDyn

*) M_{max} = 23 Nm at I_{max} = 12.7 A_{eff}
**) M_{max} = 14.5 Nm at I_{max} = 7.5 A_{eff}

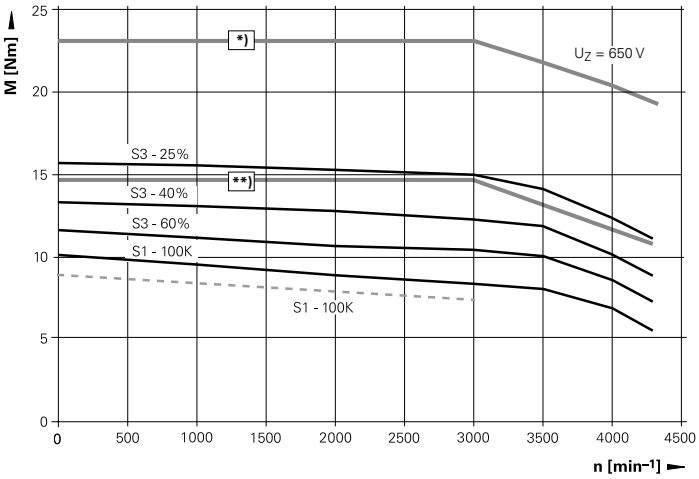

QSY 155 B

*) M_{max} = 39 Nm at I_{max} = 29.7 A_{eff}
**) M_{max} = 21 Nm at I_{max} = 15 A_{eff}

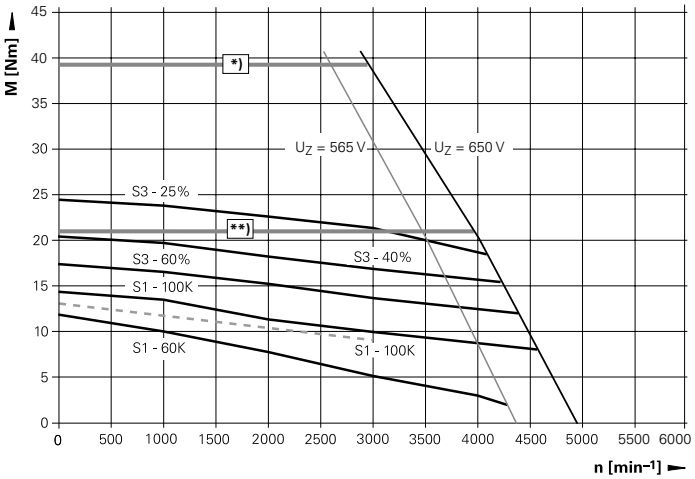

QSY 155 C

*) M_{max} = 52 Nm at I_{max} = 38.9 A_{eff}
**) M_{max} = 42 Nm at I_{max} = 30 A_{eff}

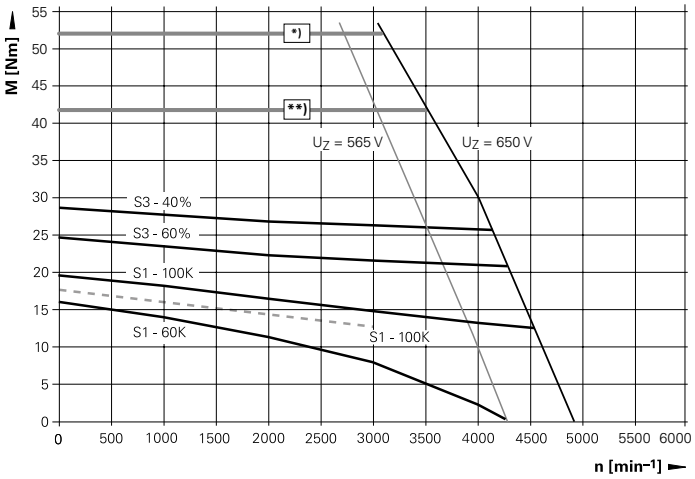

QSY 155 D

*) M_{max} = 64 Nm at I_{max} = 49.5 A_{eff}
**) M_{max} = 42 Nm at I_{max} = 30 A_{eff}

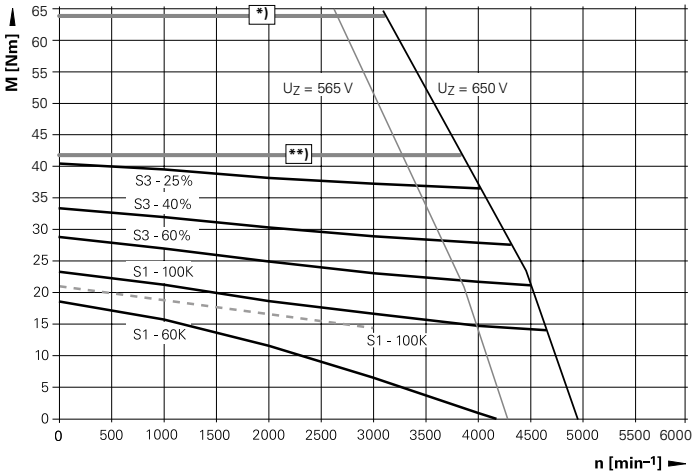

QSY 155 F

*) M_{max} = 90 Nm at I_{max} = 68.6 A_{eff}
**) M_{max} = 64 Nm at I_{max} = 46 A_{eff}

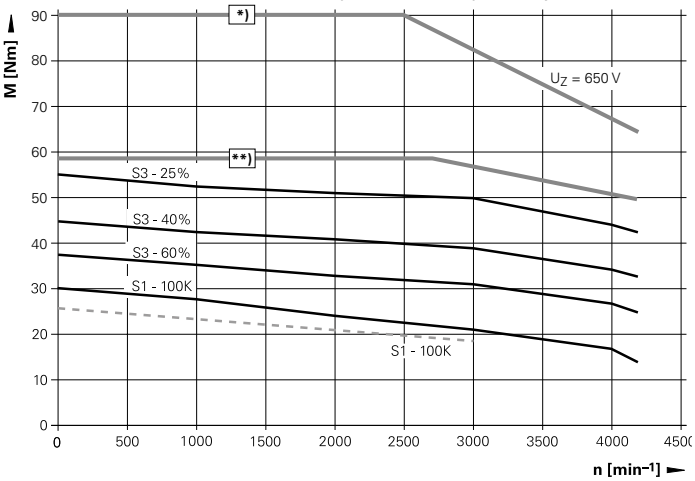

QSY 155 B EcoDyn

*) M_{max} = 39 Nm at I_{max} = 21.2 A_{eff}
**) M_{max} = 29 Nm at I_{max} = 15 A_{eff}

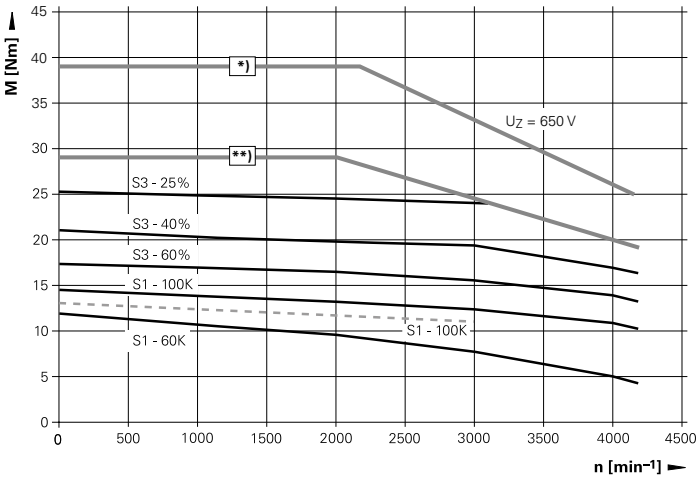

QSY 190 C EcoDyn

*) M_{max} = 85 Nm at I_{max} = 50.2 A_{eff}
**) M_{max} = 59 Nm at I_{max} = 30 A_{eff}

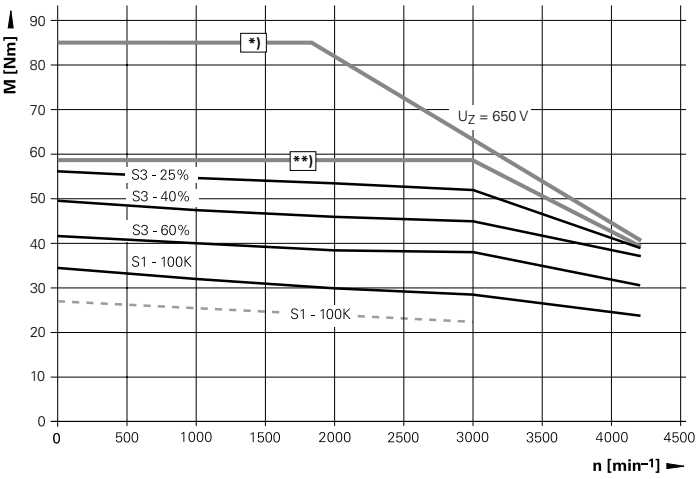

QSY 155 C EcoDyn

*) M_{max} = 52 Nm at I_{max} = 27.6 A_{eff}
**) M_{max} = 29 Nm at I_{max} = 15 A_{eff}

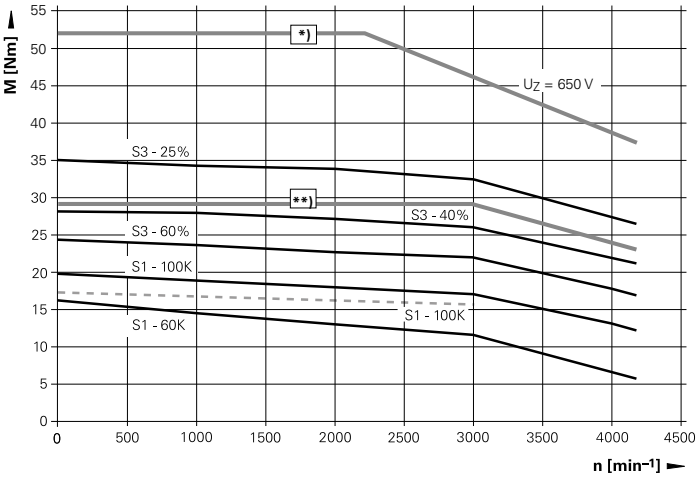

QSY 190 D EcoDyn

*) M_{max} = 107 Nm at I_{max} = 62.9 A_{eff}
**) M_{max} = 59 Nm at I_{max} = 30 A_{eff}

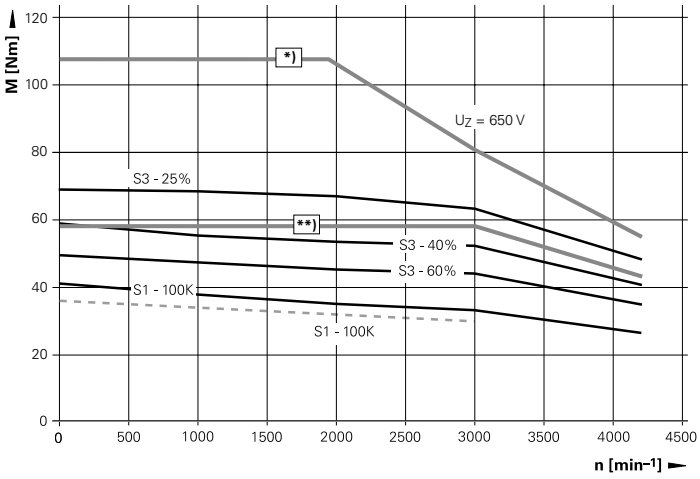

QSY 155 D EcoDyn

*) M_{max} = 64 Nm at I_{max} = 35 A_{eff}
**) M_{max} = 59 Nm at I_{max} = 30 A_{eff}

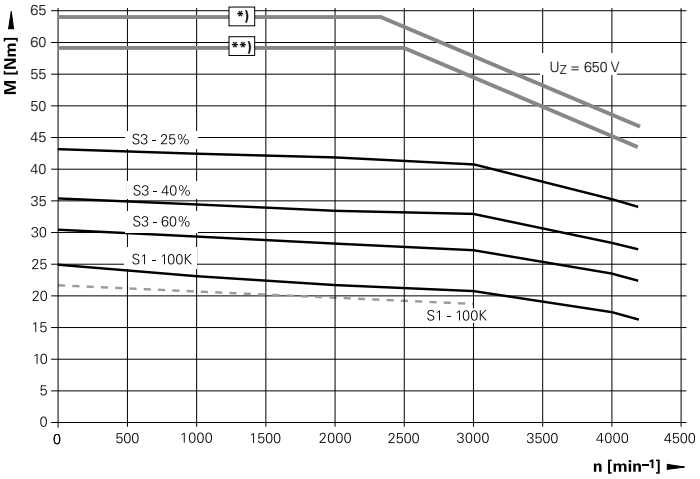

QSY 190 F EcoDyn

*) M_{max} = 150 Nm at I_{max} = 88.4 A_{eff}
**) M_{max} = 59 Nm at I_{max} = 30 A_{eff}

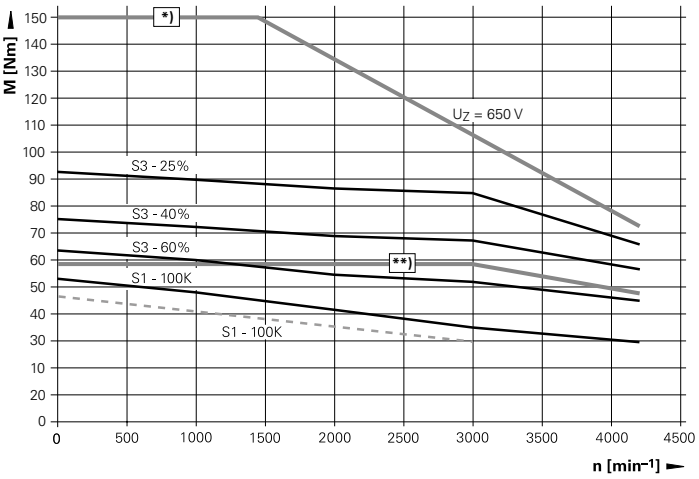

QSY 155 F EcoDyn

*) M_{max} = 90 Nm at I_{max} = 49.5 A_{eff}
**) M_{max} = 59 Nm at I_{max} = 30 A_{eff}

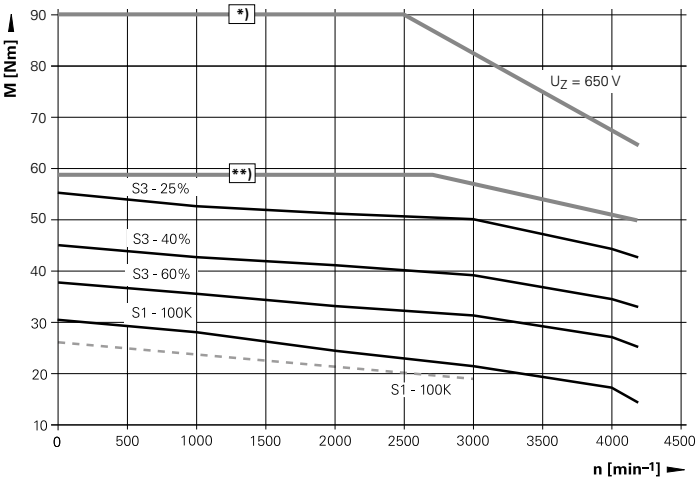

QSY 190 K EcoDyn

*) M_{max} = 240 Nm at I_{max} = 134.3 A_{eff}
**) M_{max} = 123 Nm at I_{max} = 64 A_{eff}

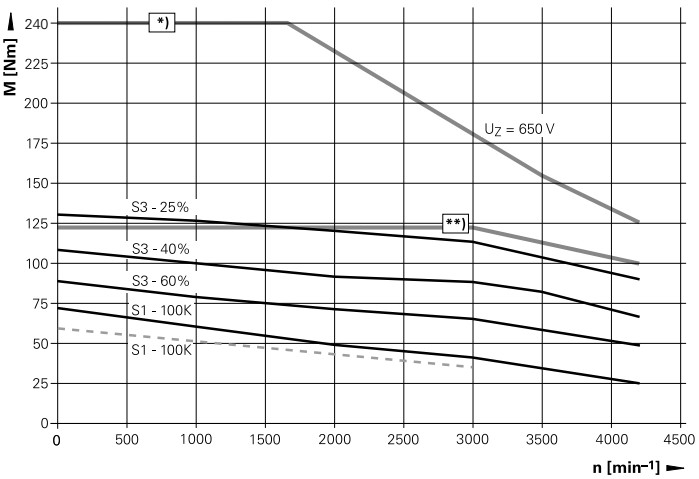

Cables and connectors

Power cables

Current load at ambient temperature up to 40 °C

	Cable with one connector ID	Connector ID	Cable without connectors ID	Bend radius R for frequent flexing	Cable type	Diameter
Current load up to 13.8 A						
QSY 55 **QSY 96** **QSY 116** **QSY 130** **QSY 155 B EcoDyn** **QSY 155 C EcoDyn** **QSY 155 D EcoDyn**	352960-xx	325165-02	348948-01	≥ 65 mm	PUR [4 x 1.5 mm^2 + (2 x 1.0 mm^2)]	12.5 mm
QSY 155 B **QSY 155 C** **QSY 155 F EcoDyn**	352962-xx	333090-02				
Current load up to 26.0 A						
QSY 155 D **QSY 155 F** **QSY 190 C EcoDyn** **QSY 190 D EcoDyn** **QSY 190 F EcoDyn**	352963-xx	333090-02	348948-03	≥ 75 mm	PUR [4 x 4 mm^2 + (2 x 1.0 mm^2)]	14.8 mm
Current load up to 32.8 A						
QSY 190 K EcoDyn	393570-xx	333090-03	348948-04	≥ 85 mm	PUR [4 x 6 mm^2+ (2 x 1.0 mm^2)]	16.4 mm

Encoder cables

	Cable length	Cable complete with connectors ID	Line drop compensator ID	Extension cable ID	Bend radius R for frequent flexing
QSY with ECN 1313 or EQN 1325	< 15 m	336376-xx	–	340302-xx (as required)	≥ 100 mm
	> 15 m	336376-xx	370224-01	340302-xx	
QSY synchronous motor with ERN 1185 or ERN 1387	< 30 m	289440-xx	–	336847-xx (as required)	≥ 100 mm
	> 30 m	289440-xx	370226-01	336847-xx	

Asynchronous motors
QAN overview

General technical information

Speed measurement
An integrated rotary encoder from HEIDENHAIN measures the shaft speed.
- ERN 1381 with 1 024 lines for motors with stub shaft
- ERM 280 with 600 lines for motors with hollow shaft and QAN 200 M/18 000

Specifications
The specifications and the characteristic curves apply to motors mounted without thermal insulation. The temperature may differ from the maximum permissible ambient temperature of 40 °C by a maximum of 105 K. If the motor is mounted so that it is thermally insulated, it is necessary to reduce the motor torque in order to avoid thermal overloading of the motor.

Shaft bearing
HEIDENHAIN asynchronous motors are equipped with maintenance-free bearings. The shaft bearing on **motors with stub shaft** is optionally available as either standard bearing or as spindle bearing. The version with spindle bearing can withstand greater radial forces and allows higher spindle speeds.
Motors with spindle bearing have a slightly larger overall length.

The **hollow-shaft motors** always have spindle bearings.

Mechanical life
The service life of the bearings depends on the shaft load and the average shaft speed (see the *Inverter Systems and Motors* Technical Manual).
The nominal bearing service life—which depends on the specific motor and applies for a certain maximum shaft load at an average shaft speed—is 10 000 hours for QAN motors.

Shaft end
QAN asynchronous motors from HEIDENHAIN have a cylindrical shaft end as per DIN 748-1. The stub-shaft motors have a centering hole as per DIN 332-DR.

Asynchronous motors with **standard bearing** are supplied with keyway and feather key as per DIN 6885-1 and are full-key balanced. They are also available with smooth shaft upon request.

Feather key:
QAN 200: AS 10 x 8 x 70
QAN 260: AS 12 x 8 x 90
QAN 320: AS 16 x 10 x 90

The standard version of the asynchronous motors **with spindle bearing** has a smooth shaft (without keyway and feather key). Upon request motors with stub shaft are also available with keyway and feather key as per DIN 6885-1.

Precision balancing
QAN asynchronous motors from HEIDENHAIN can be balanced at any time.

Hollow-shaft motors
The QAN 200 UH and QAN 260 xH motors with hollow shaft are suited for direct mounting to mechanical spindles. The hollow shaft permits you to convey coolant to tools with inner cooling.

The coolant is introduced at the rear of the motor through a rotating manifold (e.g. from Deublin, order no.: 1109-020-188). The shaft end is designed for this.

Mechanical data

Design IM B35 (mounting via flange/base) according to EN 60 034-7
Mounting of the motor
We recommend using the following screws according to DIN EN ISO 4017 to mount the motor:

Fastening:	*Flange*	*Base*
QAN 200	M12 x 30	M10 x 30
QAN 260	M16 x 40	M12 x 35
QAN 320	M18 x 60	M14 x 40

Flange: Dimensions as per DIN 42 948 and IEC 72
Protection as per EN 60 529
Motor: IP 54
Shaft end: IP 43
Vibration severity
Grade SR (external precision balancing possible)
(IEC 60 034-14)

Thermal specifications

Separate cooling via integrated fan
Temperature monitoring with KTY 84-130 thermistor in the stator winding
Thermal class F

Asynchronous motors with stub shaft	Rated power output	Rated speed	Max. speed		Rated torque	Rated current	Recommended inverters			Page
			Standard bearing	Spindle bearing			1-axis module	2-axis module	Compact inverter	
QAN 200M	5.5 kW	1500 min^{-1}	9000 min^{-1}	12000 min^{-1}	35.0 Nm	18.0 A	UM 112D	UM 122D	Spindle output	**26**
QAN 200L	7.5 kW	1500 min^{-1}	9000 min^{-1}	12000 min^{-1}	47.8 Nm	20.1 A	UM 112D	UM 122D	Spindle output	
QAN 200U	10.0 kW	1500 min^{-1}	9000 min^{-1}	12000 min^{-1}	63.7 Nm	25.0 A	UM 112D	UM 122D	Spindle output[1]	
QAN 260M	15.0 kW	1500 min^{-1}	8000 min^{-1}	10000 min^{-1}	95.5 Nm	35.0 A	UM 113D	–	Spindle output[2]	**28**
QAN 260L	20.0 kW	1500 min^{-1}	8000 min^{-1}	10000 min^{-1}	127.3 Nm	46.0 A	UM 113D	–	–	
QAN 260U	24.0 kW	1500 min^{-1}	8000 min^{-1}	10000 min^{-1}	152.8 Nm	58.0 A	UM 114D	–	–	
QAN 260W	12.0 kW	750 min^{-1}	8000 min^{-1}	10000 min^{-1}	152.8 Nm	29.0 A	UM 112D	–	Spindle output[2]	
QAN 320M	32.0 kW	1500 min^{-1}	8000 min^{-1}	10000 min^{-1}	203.7 Nm	77.5 A	UM 114D	–	–	**30**
QAN 320L	40.0 kW	1500 min^{-1}	8000 min^{-1}	10000 min^{-1}	254.6 Nm	99.0 A	UM 115D	–	–	
QAN 320W	18.0 kW	750 min^{-1}	8000 min^{-1}	10000 min^{-1}	229.2 Nm	43.0 A	UM 114D	–	–	

Asynchronous motors with hollow shaft	Rated power output	Rated speed	Max. speed		Rated torque	Rated current	Recommended inverters			Page
			Standard bearing	Spindle bearing			1-axis module	2-axis module	Compact inverter	
QAN 200UH	10.0 kW	1500 min^{-1}	–	12000 min^{-1} 15000 min^{-1}	63.7 Nm	25.0 A	UM 112D	UM 122D	Spindle output[1]	**32**
QAN 260MH	15.0 kW	1500 min^{-1}	–	12000 min^{-1}	96.0 Nm	35.0 A	UM 113D	–	Spindle output[2]	**34**
QAN 260LH	20.0 kW	1500 min^{-1}	–	12000 min^{-1}	128.0 Nm	46.0 A	UM 113D	–	–	
QAN 260UH	22.0 kW	1500 min^{-1}	–	10000 min^{-1} 12000 min^{-1}	140.0 Nm	54.0 A	UM 113D[1] UM 114D[3]	–	–	

[1] Only UE 24xB, UR 24x [2] Only UR 24x [3] Depending on the required acceleration of the spindle (I_{max})

Asynchronous motors with stub shaft
QAN 200 series

Spindle motors with 2 pole pairs
Rated power output 5.5 kW to 10 kW
Choice of standard or spindle bearing

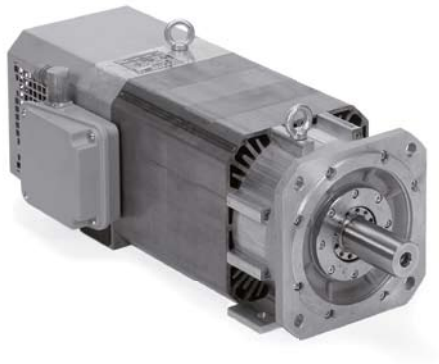

Motor	**QAN 200M**	**QAN 200L**	**QAN 200U**
Rated voltage U_N	250 V	305 V	330 V
Rated power output P_N	5.5 kW	7.5 kW	10.0 kW
Rated shaft speed n_N	1 500 min^{-1}		
Rated torque M_N (105 K)	35.0 Nm	47.8 Nm	63.7 Nm
Rated current I_N (105 K)	18.0 A	20.1 A	25.0 A
Efficiency	0.85		
Max. speed n_{max}[1)] Standard bearing Spindle bearing	 9 000 min^{-1} 12 000 min^{-1}	 9 000 min^{-1} 12 000 min^{-1}	
Max. current I_{max}	33 A	36 A	44 A
Weight m	51 kg	68 kg	83 kg
Rotor inertia J	245 $kgcm^2$	353 $kgcm^2$	405 $kgcm^2$
Protection	IP 54		
Fan Rated voltage U_L Rated current I_L Frequency f_L	 3 x 400 V AC 0.2 A 50 Hz/60 Hz		
ID Motor with standard bearing Motor with spindle bearing	 374328-01 374328-13	 374329-01 374329-13	 374330-01 374330-13

[1)] The max. speed depends on the motor's application conditions, such as the shaft load (see the *Inverter Systems and Motors* Technical Manual).

Rotatable connections

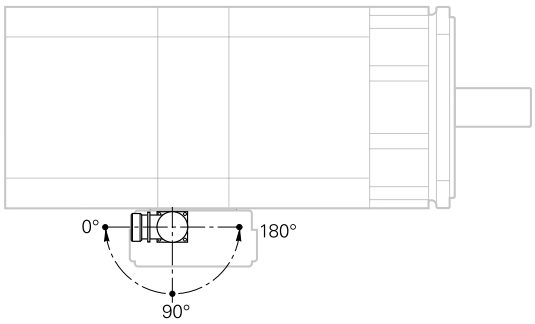

Encoder connector

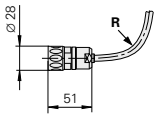

For R, see page 61

mm

Tolerancing ISO 8015
ISO 2768 - m H
< 6 mm: ±0.2 mm

QAN 200M **With standard bearing** **With spindle bearing**

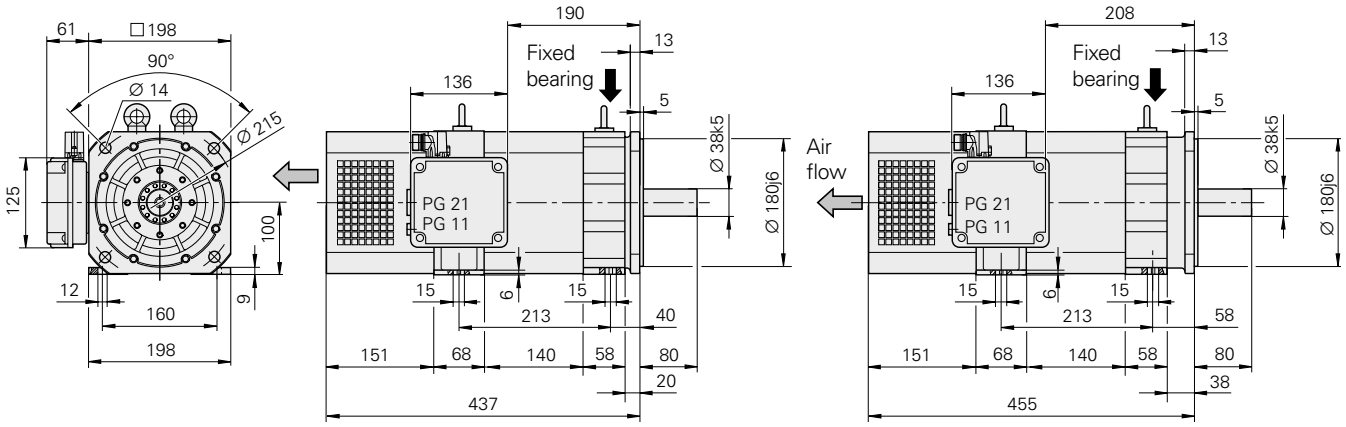

QAN 200L

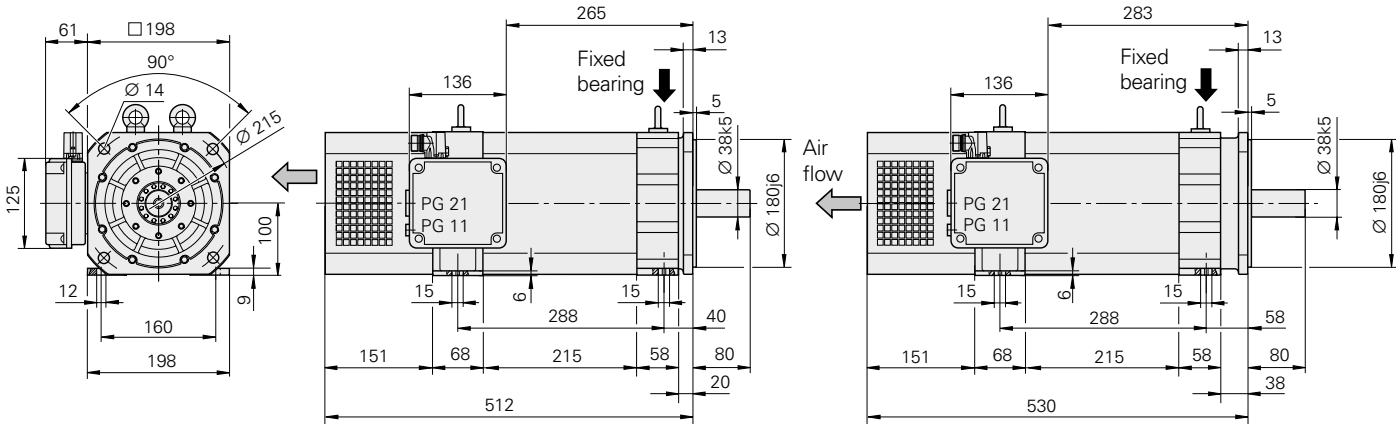

QAN 200U

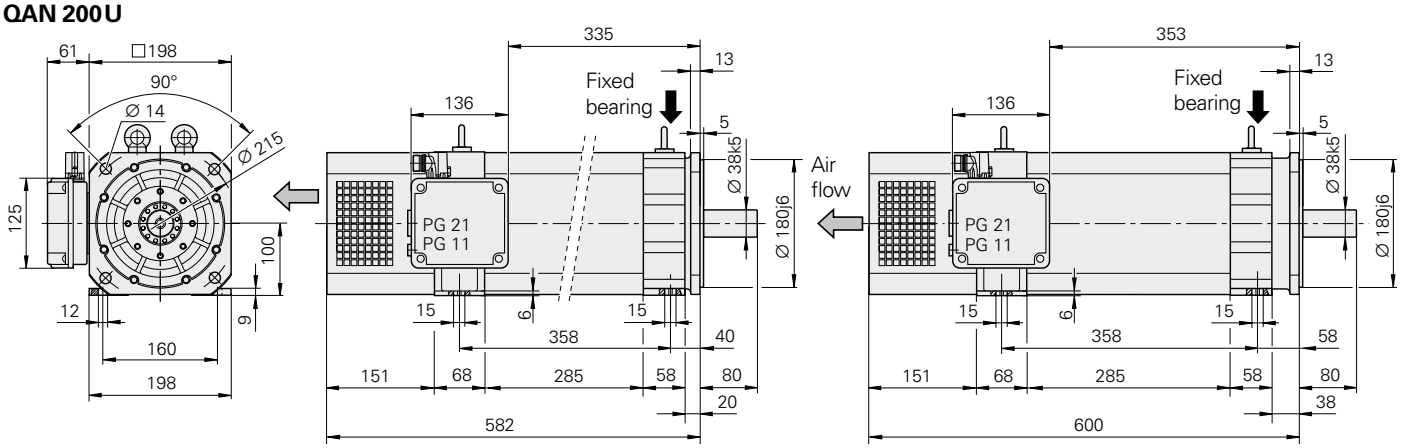

Asynchronous motors with stub shaft
QAN 260 series

Spindle motors with 2 pole pairs
Rated power output 12 kW to 24 kW
Choice of standard or spindle bearing

Motor	QAN 260M	QAN 260L	QAN 260U	QAN 260W
Rated voltage U_N	348 V	331 V	318 V	335 V
Rated power output P_N	15 kW	20 kW	24 kW	12 kW
Rated shaft speed n_N	1 500 min^{-1}			750 min^{-1}
Rated torque M_N (105 K)	96.0 Nm	128.0 Nm	153.0 Nm	153.0 Nm
Rated current I_N (105 K)	35.0 A	46.0 A	58.0 A	29.0 A
Efficiency	0.85			
Max. speed n_{max}[1)] Standard bearing Spindle bearing*	 8 000 min^{-1} 10 000 min^{-1} or 12 000 min^{-1}		 8 000 min^{-1} 10 000 min^{-1}	
Max. current I_{max}	70 A	96 A	116 A	62 A
Weight m	112 kg	135 kg	158 kg	158 kg
Rotor inertia J	700 $kgcm^2$	920 $kgcm^2$	1 100 $kgcm^2$	1 100 $kgcm^2$
Protection	IP 54			
Fan Rated voltage U_L Rated current I_L Frequency f_L	 3 x 400 V AC 0.19 A 50 Hz/60 Hz			
ID Motor with standard bearing Motor with spindle bearing 10 000 min^{-1} 12 000 min^{-1}	 510019-41 510019-53 510019-73	 510020-41 510020-53 510020-73	 510021-41 510021-53 –	 510022-41 510022-53 –

[1)] The max. speed depends on the motor's application conditions, such as the shaft load (see the *Inverter Systems and Motors* Technical Manual).
***** Please select when ordering

Rotatable connections

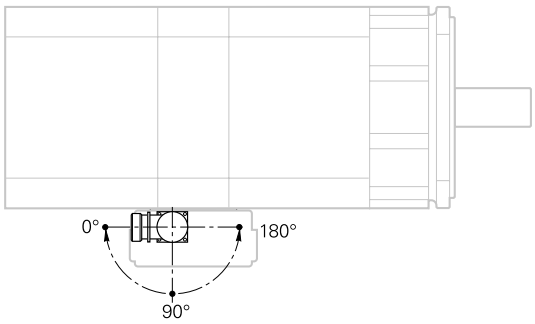

Encoder connector

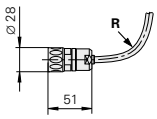

For R, see page 61

mm

Tolerancing ISO 8015
ISO 2768 - m H
< 6 mm: ±0.2 mm

QAN 260 M **With standard bearing** **With spindle bearing**

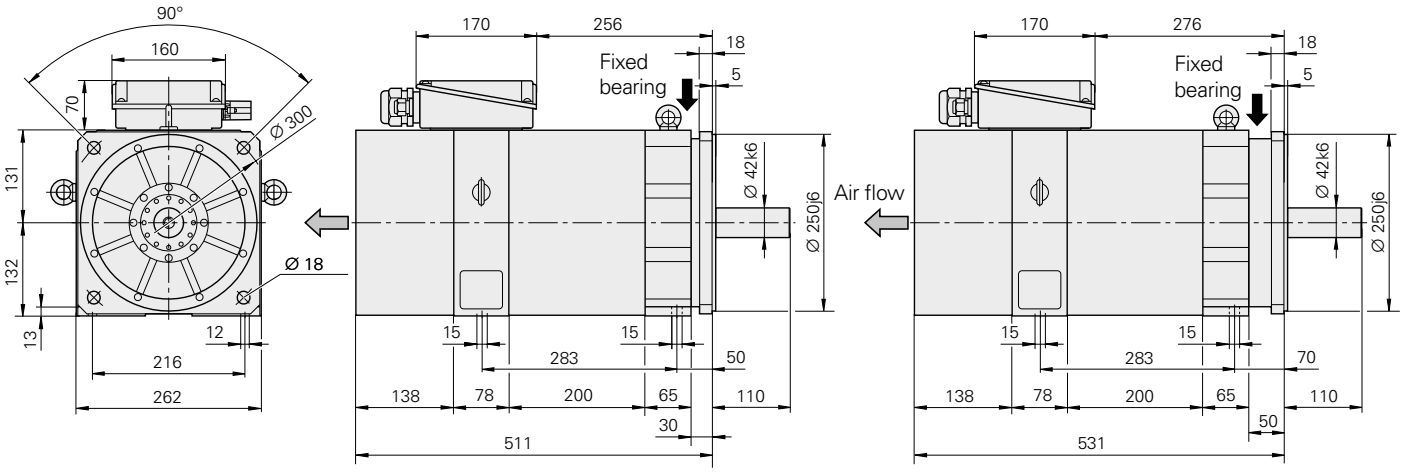

QAN 260 L

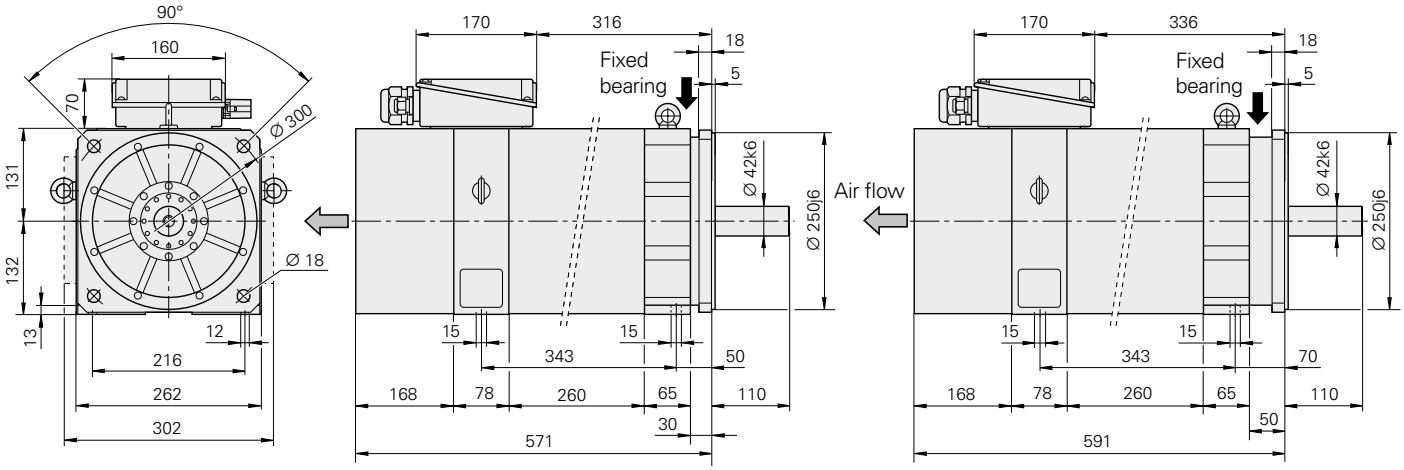

QAN 260 U
QAN 260 W

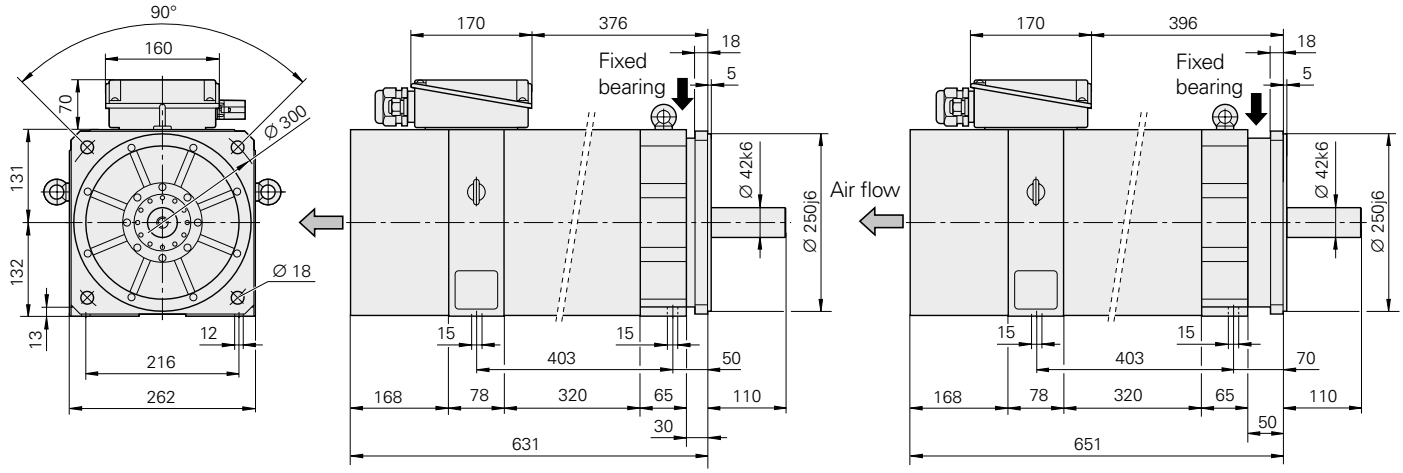

Asynchronous motors with stub shaft
QAN 320 series

Spindle motors with 2 pole pairs
Rated power output 18 kW to 40 kW

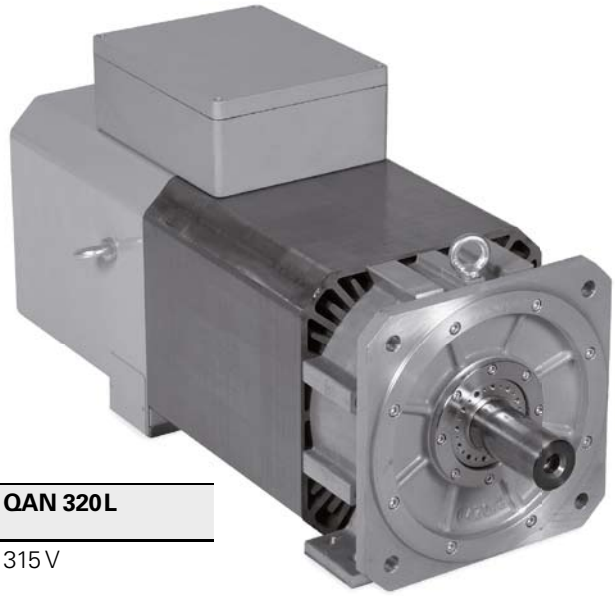

Motor	QAN 320M	QAN 320W	QAN 320L
Rated voltage U_N	317 V	320 V	315 V
Rated power output P_N	32 kW	18 kW	40 kW
Rated shaft speed n_N	1 500 min^{-1}	750 min^{-1}	1 500 min^{-1}
Rated torque M_N (105 K)	203.7 Nm	229.2 Nm	254.6 Nm
Rated current I_N (105 K)	77.5 A	43.0 A	99.0 A
Efficiency	0.85		0.91
Max. speed n_{max}[1)] Standard bearing Spindle bearing	 8 000 min^{-1} 10 000 min^{-1}		
Max. current I_{max}	155 A	86 A	186 A
Weight m	240 kg		280 kg
Rotor inertia J	1 870 $kgcm^2$		2 300 $kgcm^2$
Fan Rated voltage U_L Rated current I_L Frequency f_L	 3 x 400 V AC 0.6 A 50 Hz/60 Hz		
ID Motor with standard bearing Motor with spindle bearing	 513302-01 513302-13	 517952-01 517952-13	 577484-01 577484-13

[1)] The max. speed depends on the motor's application conditions, such as the shaft load (see the *Inverter Systems and Motors* Technical Manual).

Rotatable connections

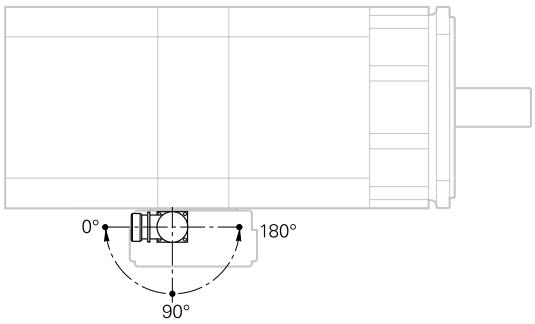

Encoder connector

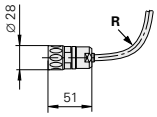

For R, see page 61

mm

Tolerancing ISO 8015
ISO 2768 - m H
< 6 mm: ±0.2 mm

QAN 320M
QAN 320W

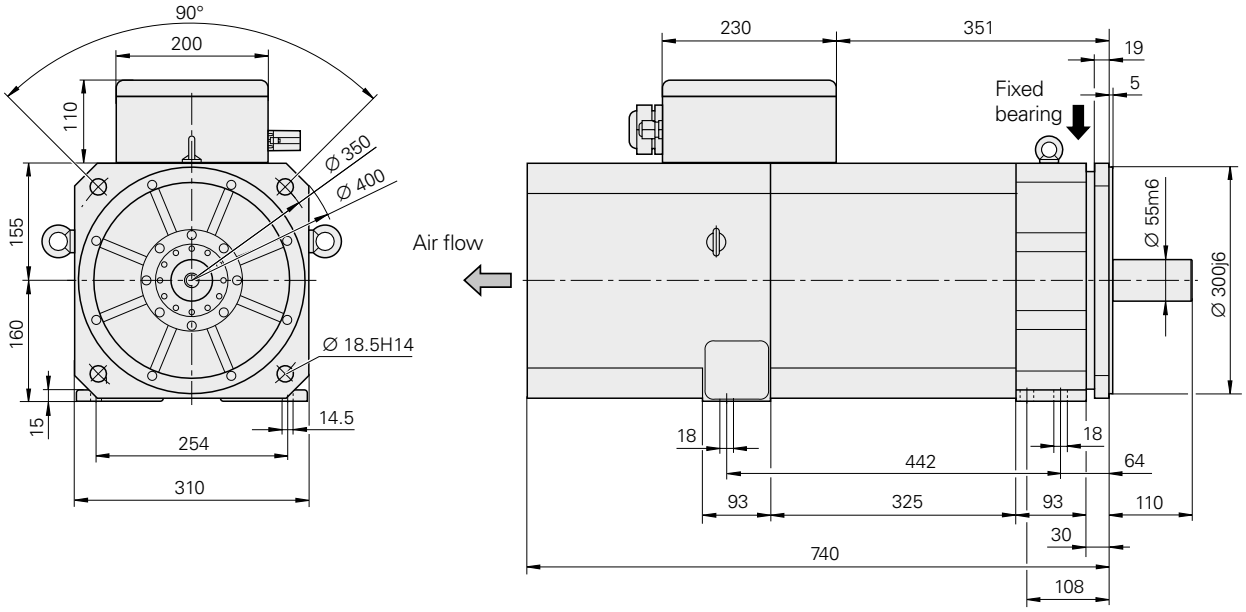

QAN 320L

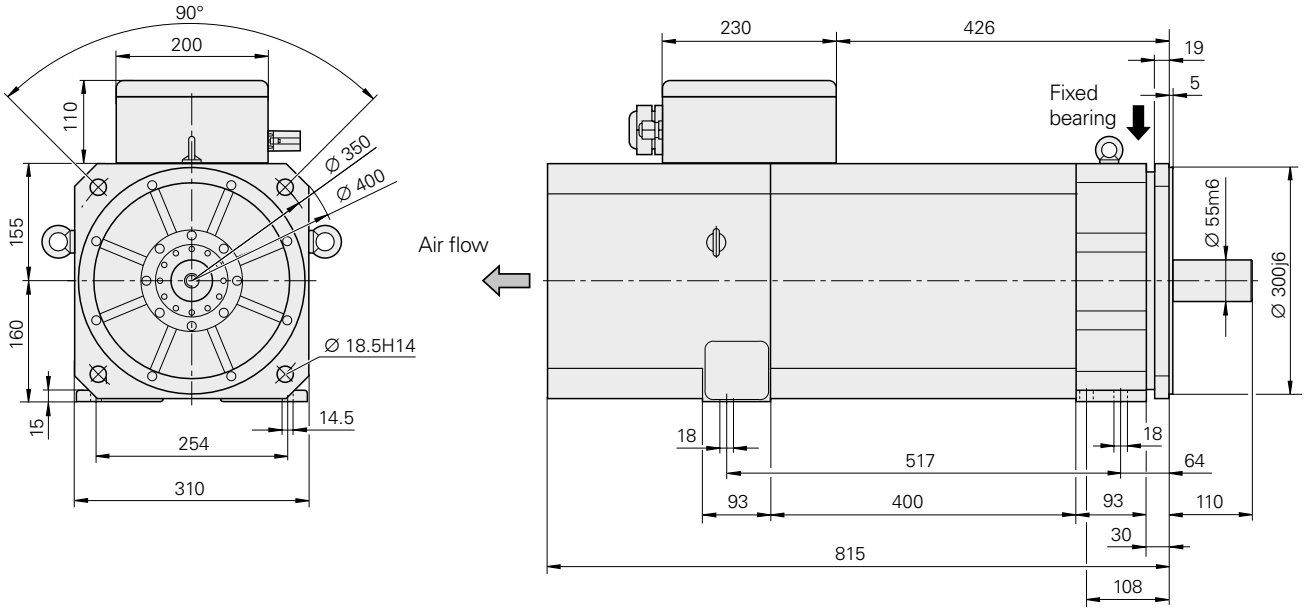

Asynchronous motors with hollow shaft
QAN 200UH

Hollow-shaft spindle motor with 2 pole pairs
Rated power output to 10 kW
With spindle bearing

Motor	QAN 200UH	
Rated voltage U_N	330 V	
Rated power output P_N	10.0 kW	
Rated shaft speed n_N	1 500 min^{-1}	
Rated torque M_N (105 K)	63.7 Nm	
Rated current I_N (105 K)	25.0 A	
Efficiency	0.85	
Max. speed n_{max}[1)] Spindle bearing	12 000 min^{-1}	15 000 min^{-1}
Max. current I_{max}	44 A	
Bore hole in shaft	Ø 9 mm	
Weight m	91 kg	
Rotor inertia J	405 $kgcm^2$	
Protection	IP 54	
Fan Rated voltage U_L Rated current I_L Frequency f_L	 3 x 400 V AC 0.2 A 50 Hz/60 Hz	
ID Motor with spindle bearing	536257-18	536257-43

[1)] The max. speed depends on the motor's application conditions, such as the shaft load (see the *Inverter Systems and Motors* Technical Manual).

Rotatable connections

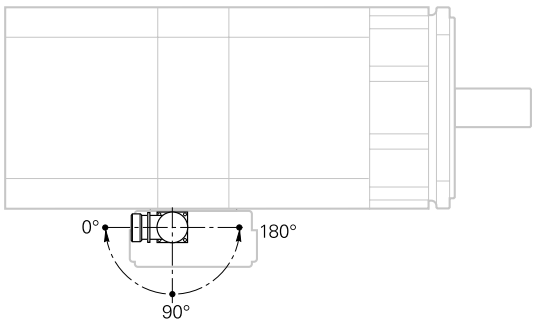

Encoder connector

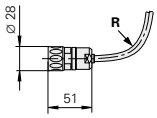

For R, see page 61

mm

Tolerancing ISO 8015
ISO 2768 - m H
< 6 mm: ±0.2 mm

QAN 200UH 12000 min^{-1}

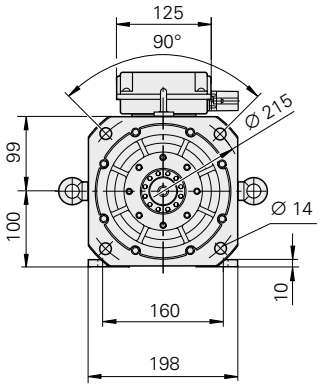

With spindle bearing

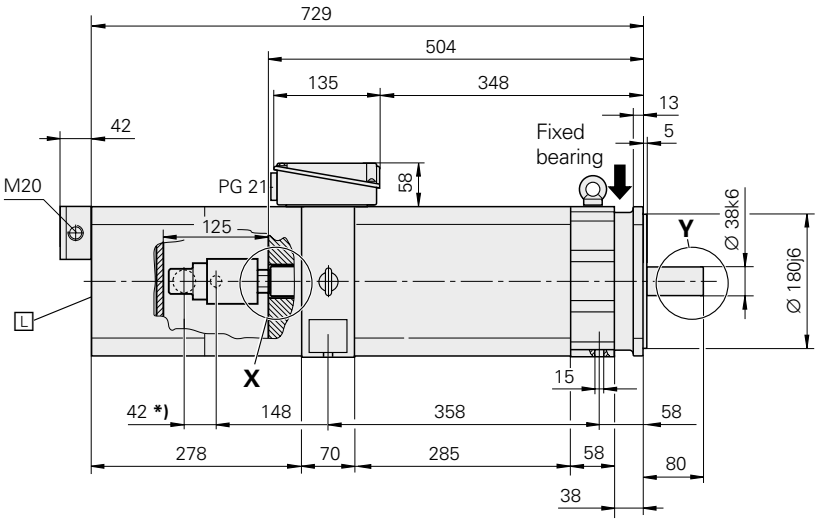

QAN 200UH 15000 min^{-1}

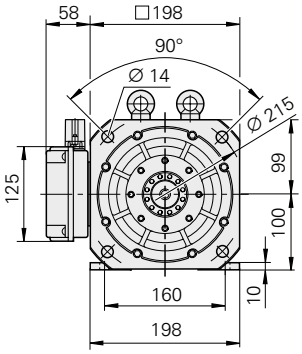

With spindle bearing

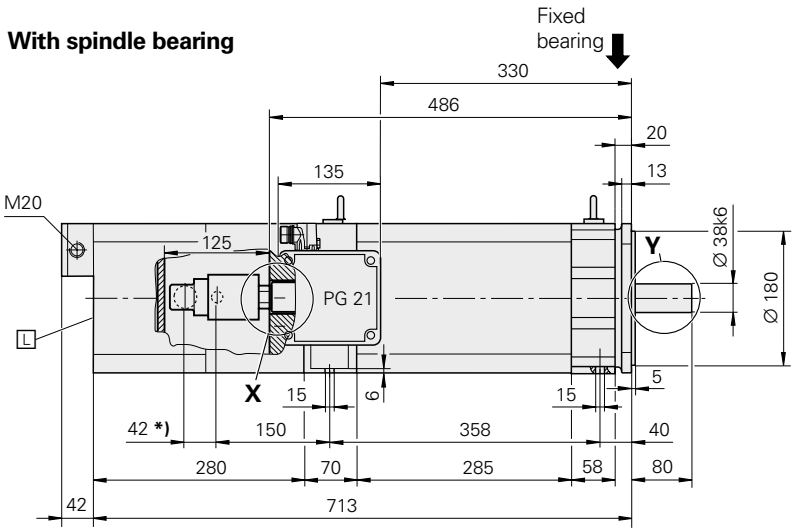

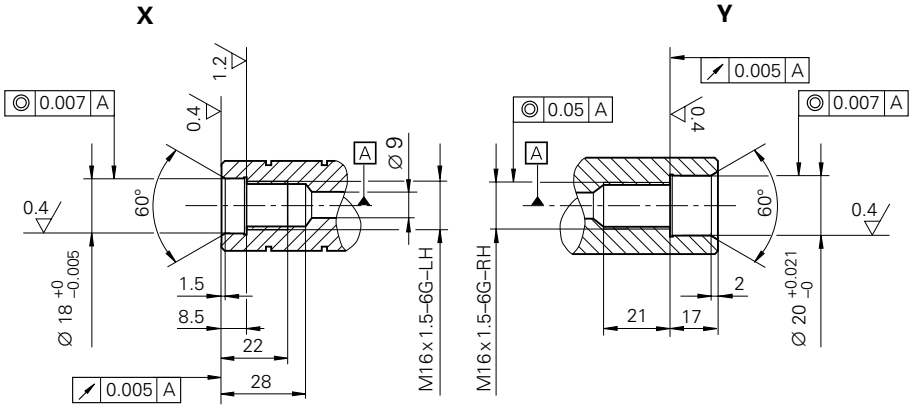

L = Air outlet at the rear

*) = Coolant connection on the right side, e.g. from Deublin 1109-020-188

Asynchronous motors with hollow shaft
QAN 260xH series

Hollow-shaft spindle motor with 2 pole pairs
Rated power output 15 kW to 22 kW
With spindle bearing

Motor	QAN 260MH	QAN 260LH	QAN 260UH
Rated voltage U_N	348 V	331 V	318 V
Rated power output P_N	15 kW	20 kW	22 kW
Rated shaft speed n_N	1 500 min^{-1}		
Rated torque M_N (105 K)	96.0 Nm	128.0 Nm	140.0 Nm
Rated current I_N (105 K)	35.0 A	46.0 A	54.0 A
Efficiency	0.85		
Max. speed n_{max}[1)] Spindle bearing*	12 000 min^{-1}		10 000 min^{-1} or 12 000 min^{-1}
Max. current I_{max}	70 A	96 A	116 A
Weight m	120 kg	143 kg	158 kg
Rotor inertia J	700 $kgcm^2$	920 $kgcm^2$	1 100 $kgcm^2$
Protection	IP 54		
Fan Rated voltage U_L Rated current I_L Frequency f_L	 3 x 400 V AC 0.19 A 50 Hz/60 Hz		
ID Motor with spindle bearing 10 000 min^{-1} 12 000 min^{-1}	 – 642855-73	 – 631449-73	 536259-53 536259-73

[1)] The max. speed depends on the motor's application conditions, such as the shaft load (see the *Inverter Systems and Motors* Technical Manual).
* Please select when ordering

Rotatable connections

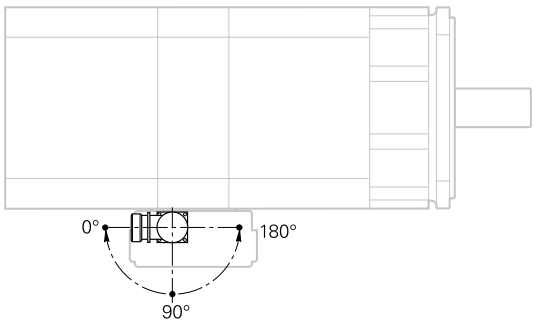

Encoder connector

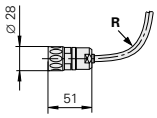

For R, see page 61

QAN 260 MH

With spindle bearing

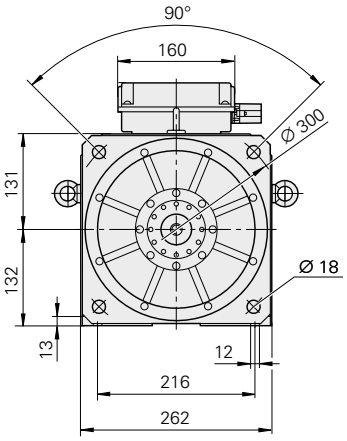

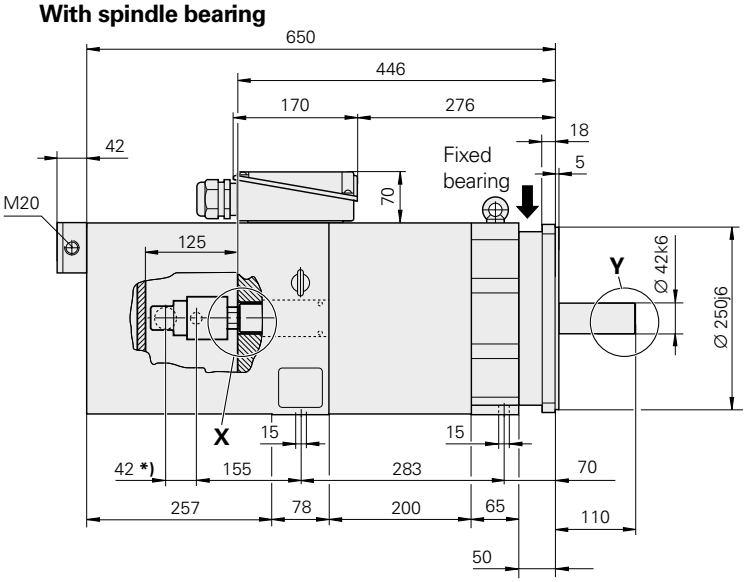

QAN 260 LH

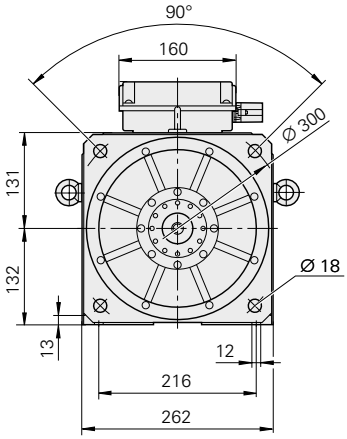

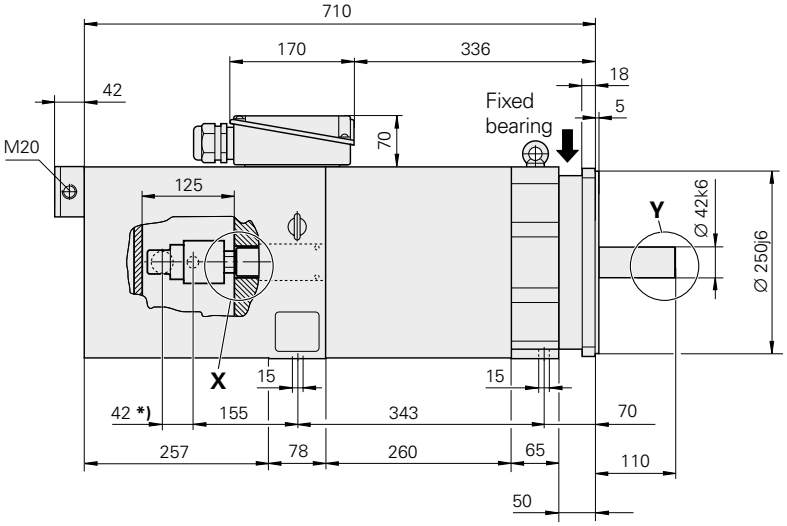

QAN 260 UH

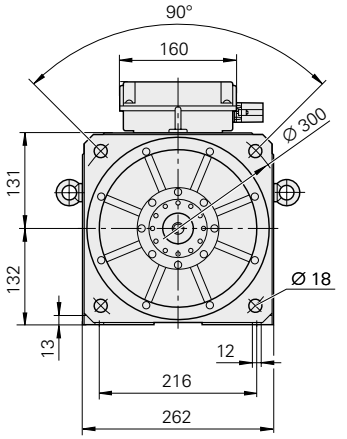

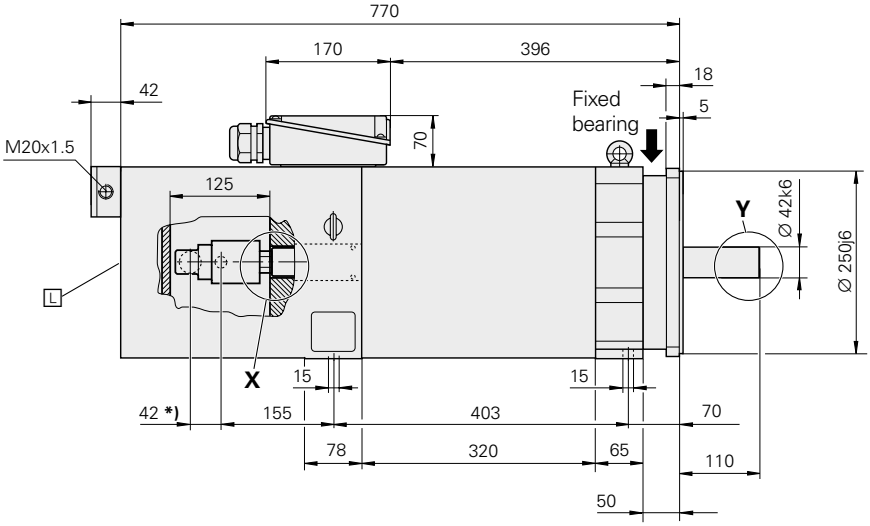

mm

Tolerancing ISO 8015
ISO 2768 - m H
< 6 mm: ±0.2 mm

L = Air outlet on both sides

***)** = Coolant connection on the right side, e.g. from Deublin 1109-020-188

X

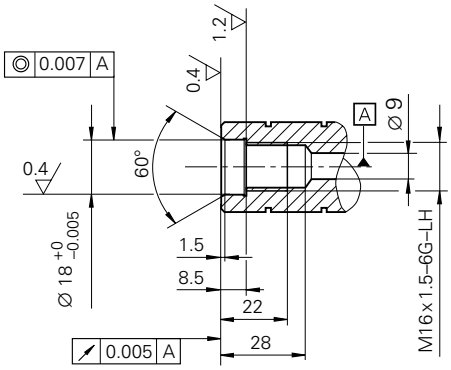

Y

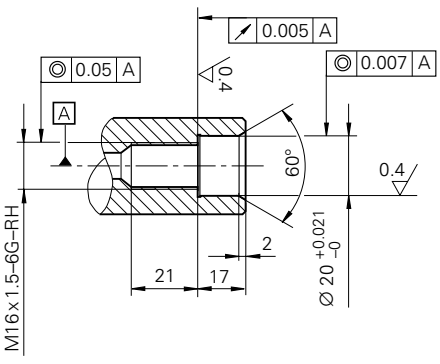

Characteristics of power and torque

QAN 200 M

Duty cycle	Speed n	Power P	Torque M	Current I
S1	1 500 min^{-1} 6 000 min^{-1} 12 000 min^{-1}	5.5 kW 5.5 kW 5.5 kW	35.0 Nm 8.8 Nm 4.4 Nm	18.0 A – –
S6-60%	1 500 min^{-1} 6 000 min^{-1} 12 000 min^{-1}	7.0 kW 7.0 kW 7.0 kW	44.7 Nm 11.2 Nm 5.6 Nm	22.0 A – –
S6-40%	1 500 min^{-1} 6 000 min^{-1} 12 000 min^{-1}	7.9 kW 7.9 kW 7.9 kW	50.4 Nm 12.6 Nm 6.3 Nm	24.0 A – –
S6-25%	1 500 min^{-1} 6 000 min^{-1} 12 000 min^{-1}	9.5 kW 9.5 kW 9.5 kW	60.7 Nm 15.2 Nm 7.6 Nm	28.0 A – –

Power characteristic curve

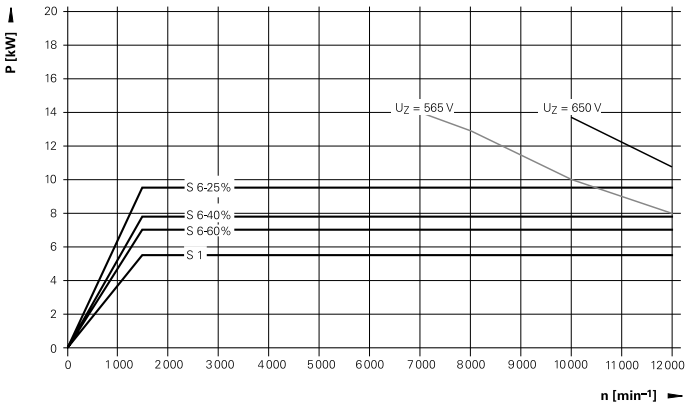

Torque characteristic curve

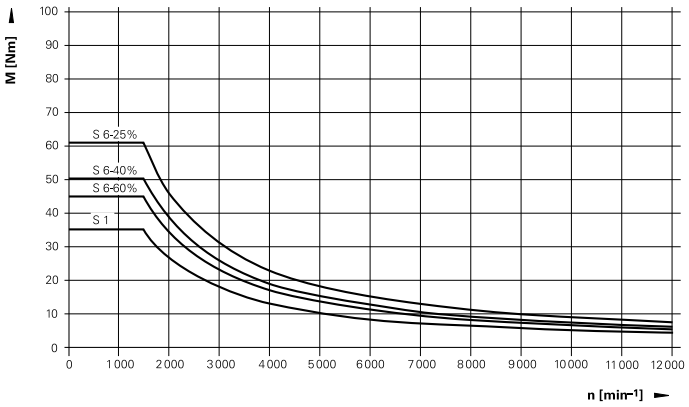

QAN 200 L

Duty cycle	Speed n	Power P	Torque M	Current I
S1	1 500 min^{-1} 6 000 min^{-1} 12 000 min^{-1}	7.5 kW 7.5 kW 7.5 kW	47.8 Nm 12.0 Nm 6.0 Nm	20.1 A – –
S6-60%	1 500 min^{-1} 10 700 min^{-1} 12 000 min^{-1}	9.8 kW 9.8 kW 8.5 kW	62.6 Nm 9.5 Nm 6.8 Nm	24.0 A – –
S6-40%	1 500 min^{-1} 9 000 min^{-1} 12 000 min^{-1}	11.5 kW 11.5 kW 8.5 kW	73.4 Nm 11.0 Nm 6.8 Nm	27.0 A – –
S6-25%	1 500 min^{-1} 7 500 min^{-1} 12 000 min^{-1}	13.0 kW 13.0 kW 8.5 kW	83.0 Nm 16.6 Nm 6.8 Nm	31.0 A – –

Power characteristic curve

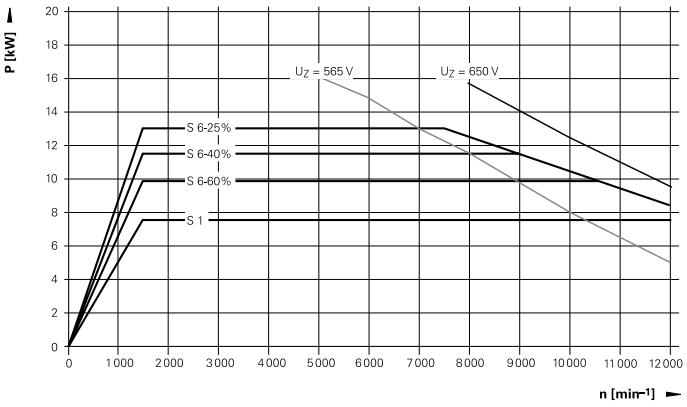

Torque characteristic curve

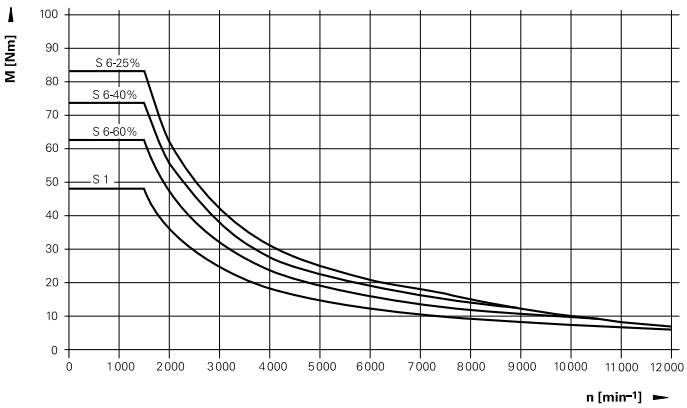

Note
- **S6 mode**
  Cycle duration 10 min.
  In the rest period the motor is idle.

QAN 200 U

Duty cycle	Speed n	Power P	Torque M	Current I
S1	1 500 min^{-1}	10.0 kW	63.7 Nm	25.0 A
	10 000 min^{-1}	10.0 kW	9.5 Nm	–
	12 000 min^{-1}	8.0 kW	6.4 Nm	–
S6-60%	1 500 min^{-1}	12.5 kW	79.8 Nm	29.0 A
	10 000 min^{-1}	12.5 kW	11.9 Nm	–
	12 000 min^{-1}	10.0 kW	8.0 Nm	–
S6-40%	1 500 min^{-1}	14.0 kW	89.4 Nm	32.0 A
	9 000 min^{-1}	14.0 kW	19.1 Nm	–
	12 000 min^{-1}	11.0 kW	8.8 Nm	–
S6-25%	1 500 min^{-1}	17.0 kW	108.6 Nm	37.0 A
	7 500 min^{-1}	17.0 kW	21.7 Nm	–
	12 000 min^{-1}	12.0 kW	9.5 Nm	–

Power characteristic curve

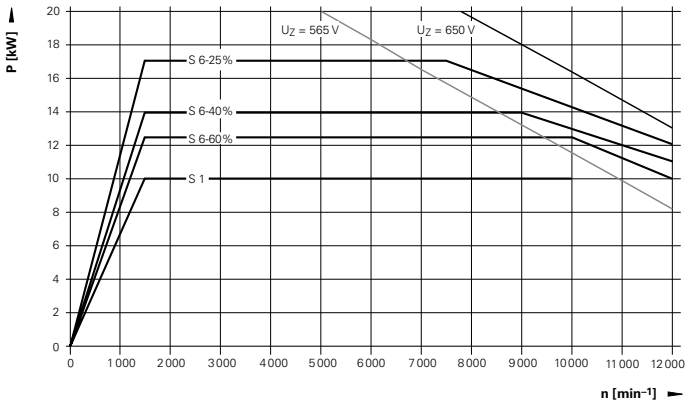

Torque characteristic curve

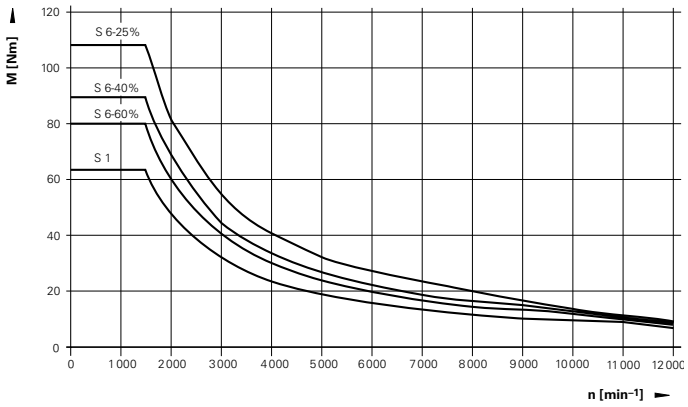

QAN 200 UH

Duty cycle	Speed n	Power P	Torque M	Current I
S1	1 500 min^{-1}	10.0 kW	63.7 Nm	25.0 A
	10 000 min^{-1}	10.0 kW	9.5 Nm	–
	12 000 min^{-1}	8.0 kW	6.4 Nm	–
	15 000 min^{-1}	4.0 kW	2.5 Nm	–
S6-60%	1 500 min^{-1}	12.5 kW	79.8 Nm	29.0 A
	10 000 min^{-1}	12.5 kW	11.9 Nm	–
	12 000 min^{-1}	10.0 kW	8.0 Nm	–
	15 000 min^{-1}	5.0 kW	3.2 Nm	–
S6-40%	1 500 min^{-1}	14.0 kW	89.4 Nm	32.0 A
	9 000 min^{-1}	14.0 kW	19.1 Nm	–
	12 000 min^{-1}	11.0 kW	8.8 Nm	–
	15 000 min^{-1}	6.0 kW	3.8 Nm	–
S6-25%	1 500 min^{-1}	17.0 kW	108.6 Nm	37.0 A
	7 500 min^{-1}	17.0 kW	21.7 Nm	–
	12 000 min^{-1}	12.0 kW	9.5 Nm	–
	15 000 min^{-1}	7.0 kW	4.5 Nm	–

Power characteristic curve

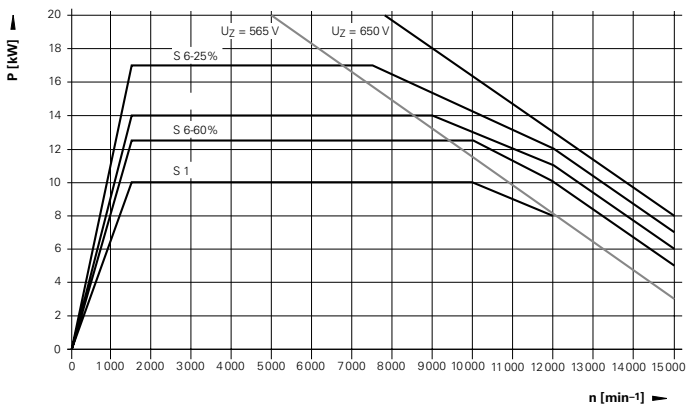

Torque characteristic curve

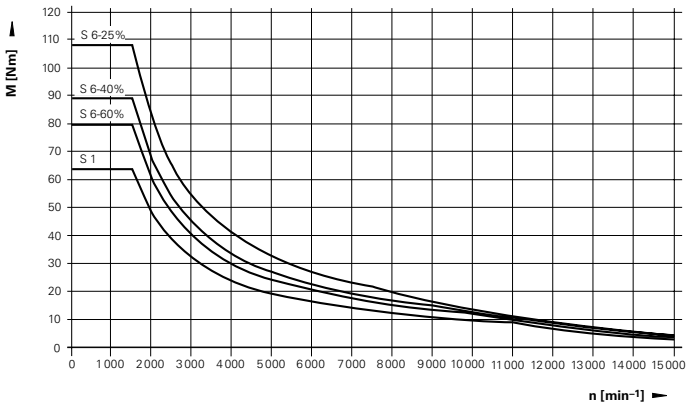

QAN 260 M, QAN 260 MH

Duty cycle	Speed n	Power P	Torque M	Current I
S1	1 500 min^{-1}	15.0 kW	95.5 Nm	35.0 A
	6 500 min^{-1}	15.0 kW	22.0 Nm	–
	10 000 min^{-1}	10.0 kW	9.5 Nm	–
	12 000 min^{-1}	4.0 kW	3.2 Nm	–
S6-60%	1 500 min^{-1}	20.0 kW	127.3 Nm	43.3 A
	5 000 min^{-1}	20.0 kW	38.2 Nm	–
	9 000 min^{-1}	13.5 kW	14.3 Nm	–
S6-40%	1 500 min^{-1}	25.0 kW	159.2 Nm	52.3 A
	4 500 min^{-1}	25.0 kW	53.1 Nm	–
	8 000 min^{-1}	16.8 kW	20.1 Nm	–
S6-25%	1 500 min^{-1}	32.0 kW	203.7 Nm	65.0 A
	4 000 min^{-1}	32.0 kW	76.4 Nm	–
	6 000 min^{-1}	23.7 kW	37.7 Nm	–

Power characteristic curve

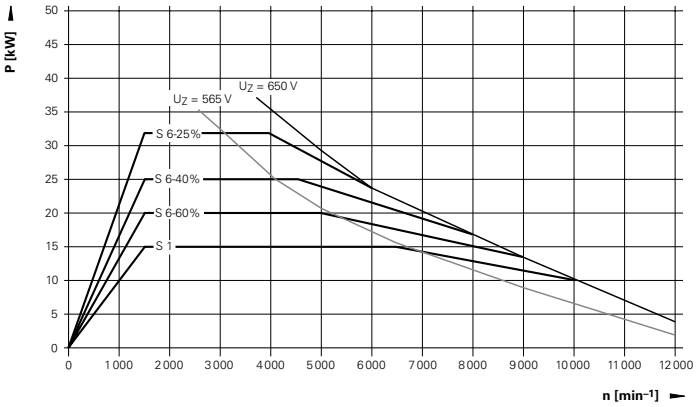

Torque characteristic curve

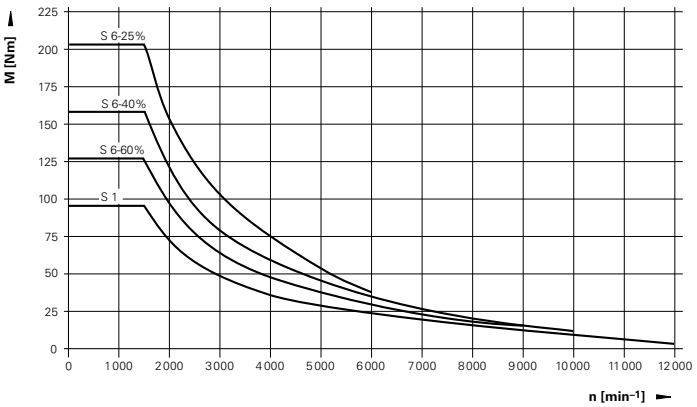

QAN 260 L, QAN 260 LH

Duty cycle	Speed n	Power P	Torque M	Current I
S1	1 500 min^{-1}	20.0 kW	127.3 Nm	46.0 A
	6 500 min^{-1}	20.0 kW	29.4 Nm	–
	10 000 min^{-1}	13.0 kW	12.4 Nm	–
	12 000 min^{-1}	8.0 kW	6.4 Nm	–
S6-60%	1 500 min^{-1}	25.0 kW	159.2 Nm	56.0 A
	6 000 min^{-1}	25.0 kW	39.4 Nm	–
	10 000 min^{-1}	16.0 kW	15.3 Nm	–
	12 000 min^{-1}	8.0 kW	6.4 Nm	–
S6-40%	1 500 min^{-1}	30.0 kW	191.0 Nm	65.0 A
	5 500 min^{-1}	30.0 kW	52.1 Nm	–
	10 000 min^{-1}	17.5 kW	16.7 Nm	–
S6-25%	1 500 min^{-1}	37.0 kW	235.5 Nm	79.0 A
	5 000 min^{-1}	37.0 kW	70.7 Nm	–
	8 000 min^{-1}	24.0 kW	28.6 Nm	–

Power characteristic curve

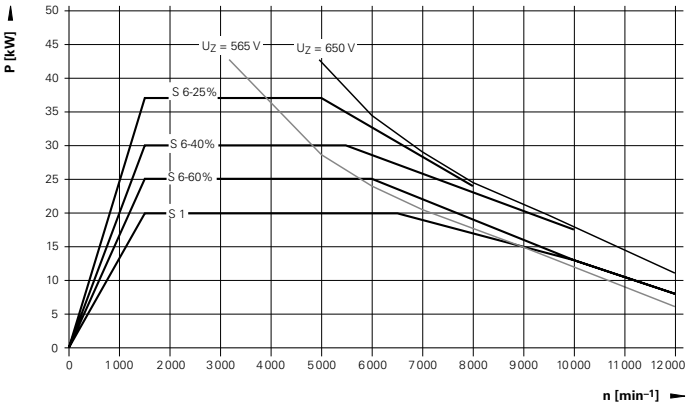

Torque characteristic curve

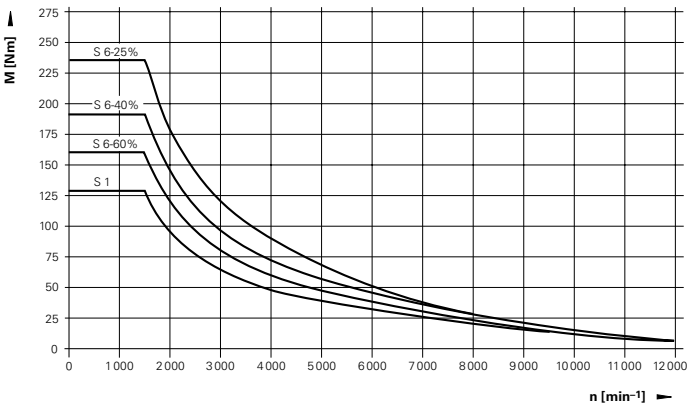

QAN 260 U

Duty cycle	Speed n	Power P	Torque M	Current I
S1	1 500 min^{-1}	24.0 kW	152.8 Nm	58.0 A
	7 400 min^{-1}	24.0 kW	31.0 Nm	–
	10 000 min^{-1}	18.0 kW	17.2 Nm	–
S6-60%	1 500 min^{-1}	30.0 kW	191.0 Nm	67.2 A
	7 000 min^{-1}	30.0 kW	40.9 Nm	–
	10 000 min^{-1}	22.5 kW	21.5 Nm	–
S6-40%	1 500 min^{-1}	38.0 kW	241.9 Nm	81.8 A
	5 500 min^{-1}	38.0 kW	66.0 Nm	–
	10 000 min^{-1}	26.0 kW	24.8 Nm	–
S6-25%	1 500 min^{-1}	48.0 kW	305.6 Nm	100.6 A
	4 500 min^{-1}	48.0 kW	101.9 Nm	–
	7 000 min^{-1}	41.0 kW	55.9 Nm	–

Power characteristic curve

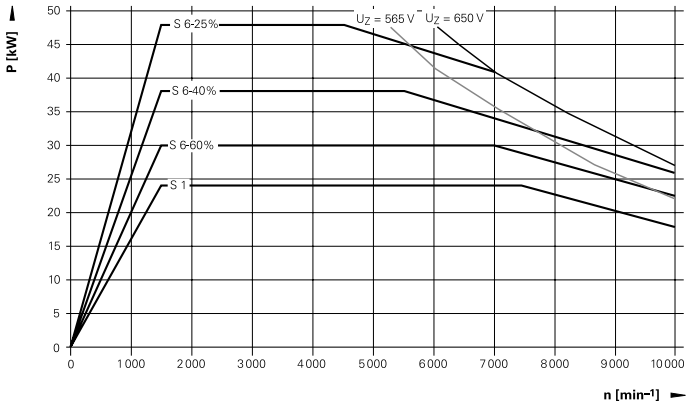

Torque characteristic curve

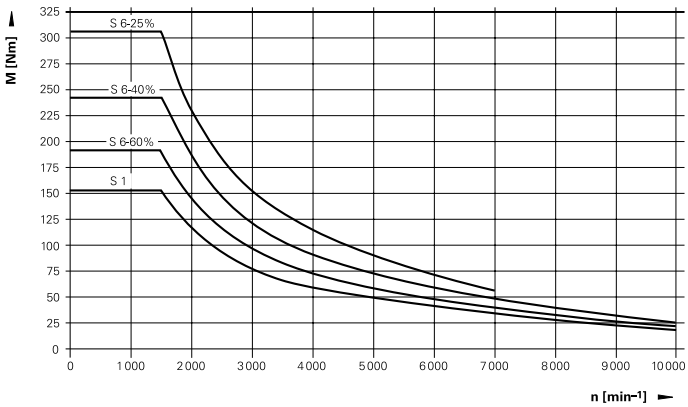

QAN 260 UH

Duty cycle	Speed n	Power P	Torque M	Current I
S1	1 500 min^{-1}	22.0 kW	140.1 Nm	54.0 A
	7 400 min^{-1}	22.0 kW	28.4 Nm	–
	10 000 min^{-1}	16.0 kW	15.3 Nm	–
S6-60%	1 500 min^{-1}	30.0 kW	191.0 Nm	67.0 A
	6 500 min^{-1}	30.0 kW	44.1 Nm	–
	10 000 min^{-1}	20.0 kW	19.5 Nm	–
S6-40%	1 500 min^{-1}	35.0 kW	222.8 Nm	77.0 A
	6 500 min^{-1}	35.0 kW	66.8 Nm	–
	10 000 min^{-1}	24.0 kW	22.9 Nm	–
S6-25%	1 500 min^{-1}	46.0 kW	286.5 Nm	97.0 A
	5 000 min^{-1}	46.0 kW	85.9 Nm	–
	10 000 min^{-1}	27.0 kW	25.8 Nm	–

Power characteristic curve

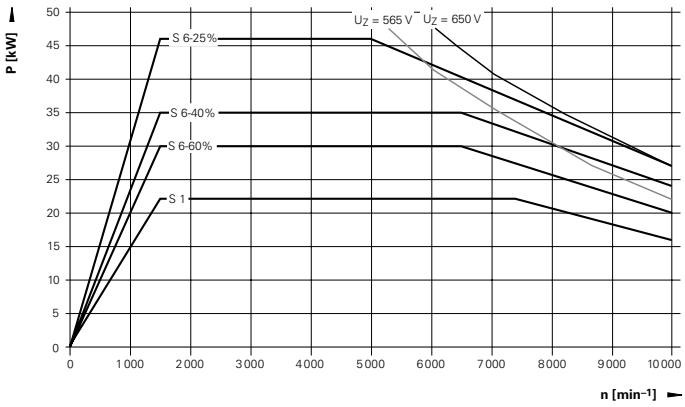

Torque characteristic curve

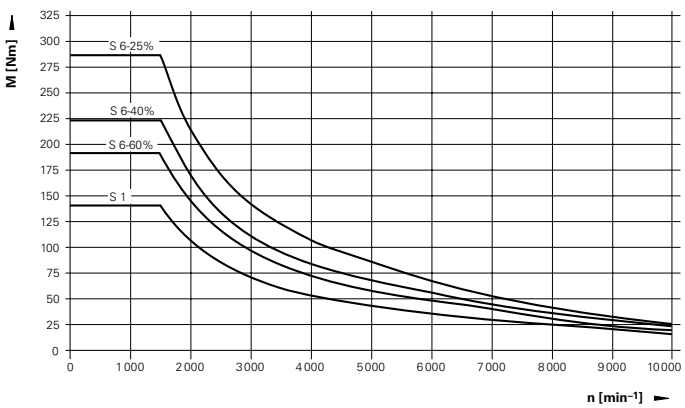

QAN 260 W

Duty cycle	Speed n	Power P	Torque M	Current I
S1	750 min^{-1} 5000 min^{-1} 10000 min^{-1}	12.0 kW 12.0 kW 4.0 kW	152.8 Nm 22.9 Nm 3.8 Nm	29.0 A – –
S6-60%	750 min^{-1} 3000 min^{-1} 6000 min^{-1}	17.5 kW 17.5 kW 11.3 kW	222.8 Nm 55.7 Nm 18.0 Nm	38.1 A – –
S6-40%	750 min^{-1} 2500 min^{-1} 3500 min^{-1}	22.0 kW 22.0 kW 19.0 kW	280.1 Nm 84.0 Nm 51.8 Nm	46.4 A – –

Power characteristic curve

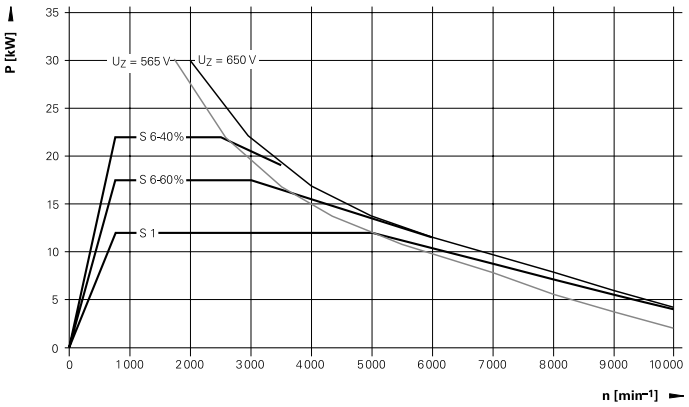

Torque characteristic curve

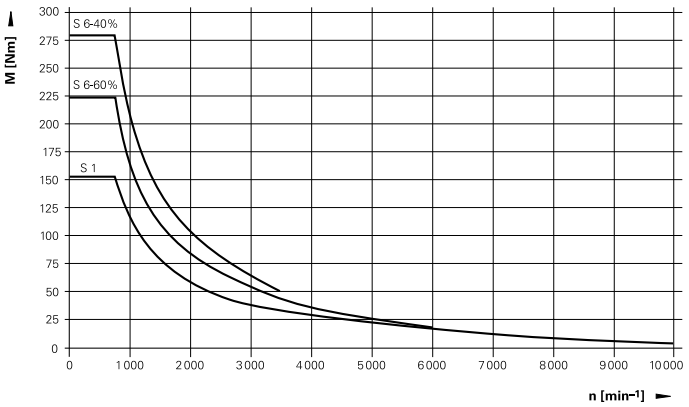

QAN 320 M

Duty cycle	Speed n	Power P	Torque M	Current I
S1	1500 min^{-1} 5500 min^{-1} 10000 min^{-1}	32.0 kW 32.0 kW 19.5 kW	203.7 Nm 55.0 Nm 18.6 Nm	77.5 A – –
S6-60%	1500 min^{-1} 5500 min^{-1} 10000 min^{-1}	43.0 kW 43.0 kW 25.0 kW	273.7 Nm 71.5 Nm 23.9 Nm	98.0 A – –
S6-40%	1500 min^{-1} 5500 min^{-1} 6000 min^{-1}	53.0 kW 53.0 kW 48.0 kW	337.4 Nm 86.2 Nm 76.4 Nm	118.0 A – –

Power characteristic curve

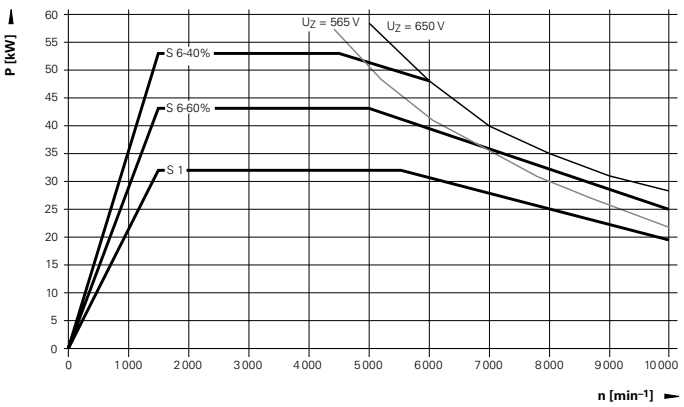

Torque characteristic curve

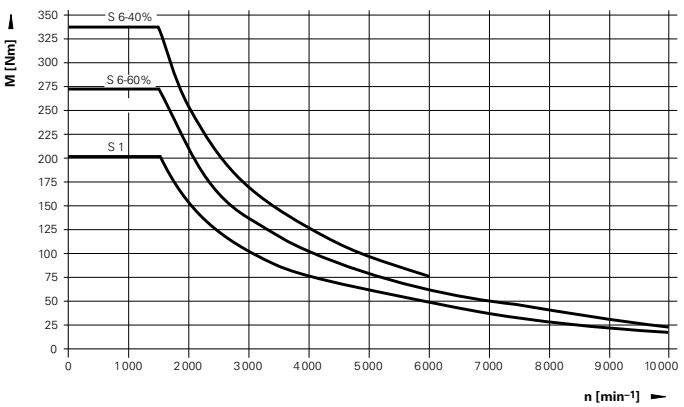

QAN 320 L

Duty cycle	Speed n	Power P	Torque M	Current I
S1	1500 min^{-1}	40.0 kW	254.6 Nm	99.0 A
	5000 min^{-1}	40.0 kW	77.9 Nm	–
	10000 min^{-1}	21.0 kW	21.0 Nm	–
S6-60%	1500 min^{-1}	53.0 kW	337.4 Nm	123.0 A
	4500 min^{-1}	53.0 kW	112.5 Nm	–
	10000 min^{-1}	24.0 kW	22.9 Nm	–
S6-40%	1500 min^{-1}	66.0 kW	420.2 Nm	148.0 A
	4500 min^{-1}	66.0 kW	140.1 Nm	–
	10000 min^{-1}	28.0 kW	26.7 Nm	–

Power characteristic curve

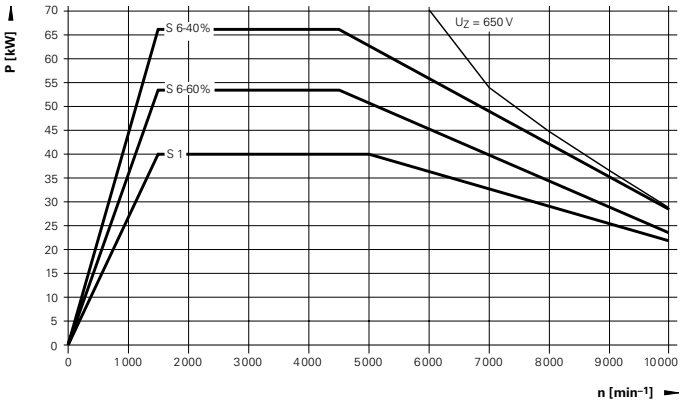

Torque characteristic curve

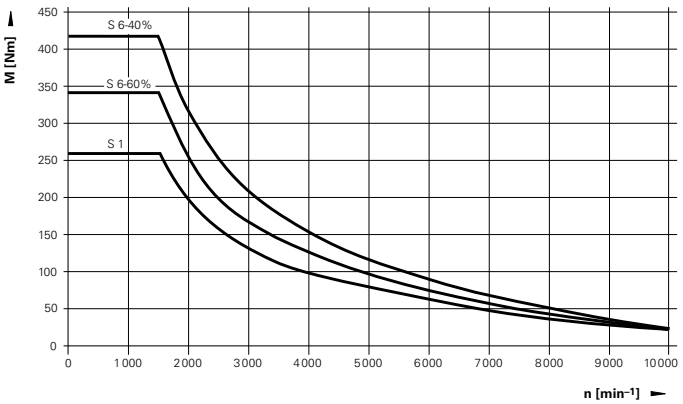

QAN 320 W

Duty cycle	Speed n	Power P	Torque M	Current I
S1	750 min^{-1}	18.0 kW	229.2 Nm	43.0 A
	3500 min^{-1}	18.0 kW	49.1 Nm	–
	10000 min^{-1}	5.0 kW	4.8 Nm	–
S6-60%	750 min^{-1}	24.0 kW	305.6 Nm	54.0 A
	2000 min^{-1}	24.0 kW	114.6 Nm	–
	4000 min^{-1}	18.5 kW	44.2 Nm	–
S6-40%	750 min^{-1}	30.0 kW	382.0 Nm	71.0 A
	2000 min^{-1}	30.0 kW	143.2 Nm	–
	3000 min^{-1}	25.0 kW	79.6 Nm	–

Power characteristic curve

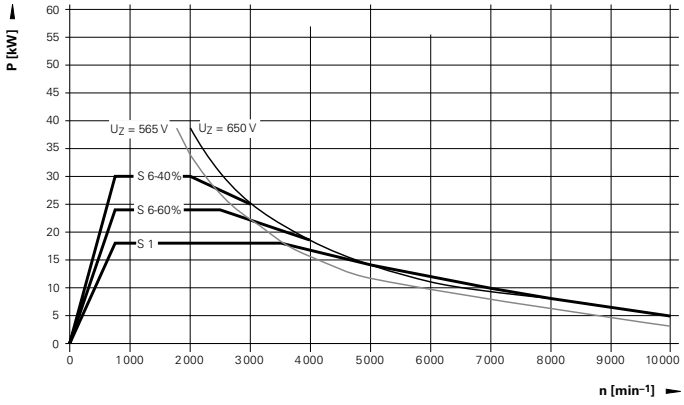

Torque characteristic curve

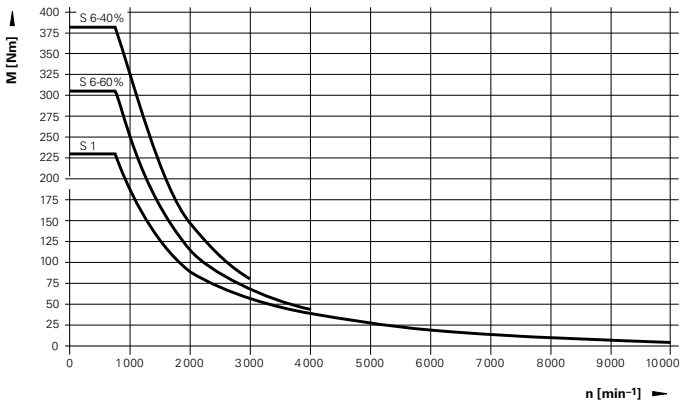

Cables

Power cables

Current load at ambient temperature up to 40 °C

	Cable without connectors ID	Bend radius R for frequent flexing	Cable type	Diameter
Current load up to 26 A (installation type B2)				
QAN 200M **QAN 200L** **QAN 200U** **QAN 200UH**	348949-04	≥ 70 mm	PUR [4 x 4 mm^2]	14.1 mm
Current load up to 32.8 A (installation type B2)				
QAN 260W	348949-05	≥ 75 mm	PUR [4 x 6 mm^2]	15.6 mm
Current load up to 45.2 A (installation type B2)				
QAN 260M **QAN 260MH** **QAN 320W**	348949-06		PUR [4 x 10 mm^2]	20.3 mm
Current load up to 59.9 A (installation type B2)				
QAN 260L **QAN 260LH** **QAN 260U** **QAN 260UH**	348949-07	≥ 135 mm	PUR [4 x 16 mm^2]	27.3 mm
Current load up to 93.8 A (installation type B2)				
QAN 320M	348949-09	≥ 175 mm	PUR [4 x 35 mm^2]	35.5 mm
Current load up to 117.5 A (installation types C and E)				
QAN 320L	348949-09	≥ 175 mm	PUR [4 x 35 mm^2]	35.5 mm

Encoder cables

	Cable length	Cable complete with connectors ID	Line drop compensator ID	Extension cable ID	Bend radius R for frequent flexing
All QAN	< 30 m	289440-xx	–	336847-xx (as required)	≥ 100 mm
	> 30 m	289440-xx	370226-01	336847-xx	

Cables for fans

	Cable without connectors ID	Bend radius R for frequent flexing	Cable type	Diameter
All QAN	348949-01	≥ 50 mm	PUR [4 x 0.75 mm^2]	10 mm

Accessories

Toroidal cores

With large line lengths, voltage peaks that may damage the motor can occur. For this reason, toroidal cores need to be used in motor lines with lengths greater than 15 m. One toroidal core is required per phase. The toroidal cores must be located close to the inverter (max. 2 m).

Toroidal core
For motor line > 15 m
ID 827054-01

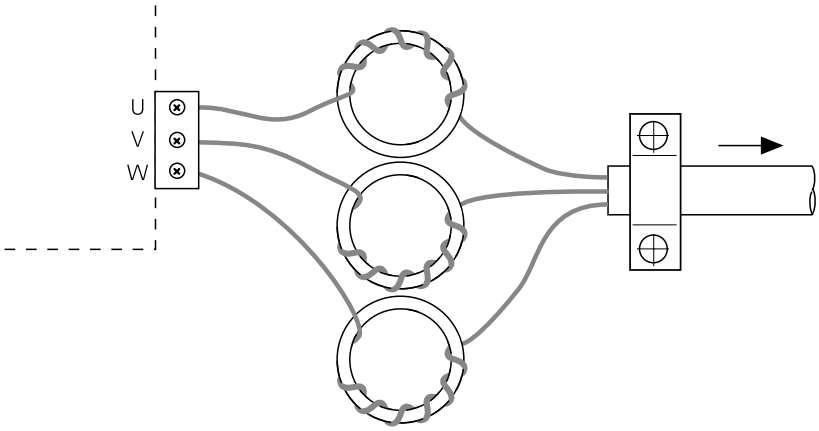

Dimensions

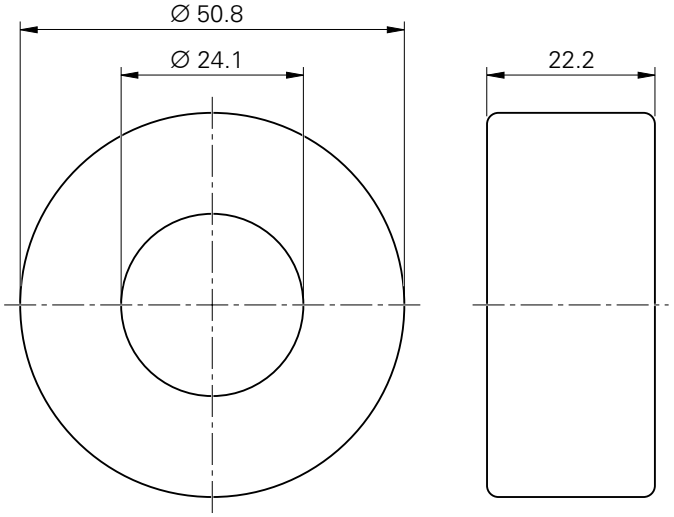

mm
Tolerancing ISO 8015
ISO 2768 - m H
< 6 mm: ±0.2 mm

HEIDENHAIN

DR. JOHANNES HEIDENHAIN GmbH
Dr.-Johannes-Heidenhain-Straße 5
83301 Traunreut, Germany
☏ +49 8669 31-0
FAX +49 8669 5061
E-mail: info@heidenhain.de

www.heidenhain.de

Vollständige und weitere Adressen siehe www.heidenhain.de
For complete and further addresses see www.heidenhain.de

DE **HEIDENHAIN Vertrieb Deutschland**
83301 Traunreut, Deutschland
☏ 08669 31-3132
FAX 08669 32-3132
E-Mail: hd@heidenhain.de

HEIDENHAIN Technisches Büro Nord
12681 Berlin, Deutschland
☏ 030 54705-240

HEIDENHAIN Technisches Büro Mitte
07751 Jena, Deutschland
☏ 03641 4728-250

HEIDENHAIN Technisches Büro West
44379 Dortmund, Deutschland
☏ 0231 618083-0

HEIDENHAIN Technisches Büro Südwest
70771 Leinfelden-Echterdingen, Deutschland
☏ 0711 993395-0

HEIDENHAIN Technisches Büro Südost
83301 Traunreut, Deutschland
☏ 08669 31-1345

AR **NAKASE SRL.**
B1653AOX Villa Ballester, Argentina
www.heidenhain.com.ar

AT **HEIDENHAIN Techn. Büro Österreich**
83301 Traunreut, Germany
www.heidenhain.de

AU **FCR Motion Technology Pty. Ltd**
Laverton North 3026, Australia
E-mail: vicsales@fcrmotion.com

BE **HEIDENHAIN NV/SA**
1760 Roosdaal, Belgium
www.heidenhain.be

BG **ESD Bulgaria Ltd.**
Sofia 1172, Bulgaria
www.esd.bg

BR **DIADUR Indústria e Comércio Ltda.**
04763-070 – São Paulo – SP, Brazil
www.heidenhain.com.br

BY **GERTNER Service GmbH**
220026 Minsk, Belarus
www.heidenhain.by

CA **HEIDENHAIN CORPORATION**
Mississauga, OntarioL5T2N2, Canada
www.heidenhain.com

CH **HEIDENHAIN (SCHWEIZ) AG**
8603 Schwerzenbach, Switzerland
www.heidenhain.ch

CN **DR. JOHANNES HEIDENHAIN (CHINA) Co., Ltd.**
Beijing 101312, China
www.heidenhain.com.cn

CZ **HEIDENHAIN s.r.o.**
102 00 Praha 10, Czech Republic
www.heidenhain.cz

DK **TP TEKNIK A/S**
2670 Greve, Denmark
www.tp-gruppen.dk

ES **FARRESA ELECTRONICA S.A.**
08028 Barcelona, Spain
www.farresa.es

FI **HEIDENHAIN Scandinavia AB**
02770 Espoo, Finland
www.heidenhain.fi

FR **HEIDENHAIN FRANCE sarl**
92310 Sèvres, France
www.heidenhain.fr

GB **HEIDENHAIN (G.B.) Limited**
Burgess Hill RH15 9RD, United Kingdom
www.heidenhain.co.uk

GR **MB Milionis Vassilis**
17341 Athens, Greece
www.heidenhain.gr

HK **HEIDENHAIN LTD**
Kowloon, Hong Kong
E-mail: sales@heidenhain.com.hk

HR Croatia → **SL**

HU **HEIDENHAIN Kereskedelmi Képviselet**
1239 Budapest, Hungary
www.heidenhain.hu

ID **PT Servitama Era Toolsindo**
Jakarta 13930, Indonesia
E-mail: ptset@group.gts.co.id

IL **NEUMO VARGUS MARKETING LTD.**
Tel Aviv 61570, Israel
E-mail: neumo@neumo-vargus.co.il

IN **HEIDENHAIN Optics & Electronics India Private Limited**
Chetpet, Chennai 600 031, India
www.heidenhain.in

IT **HEIDENHAIN ITALIANA S.r.l.**
20128 Milano, Italy
www.heidenhain.it

JP **HEIDENHAIN K.K.**
Tokyo 102-0083, Japan
www.heidenhain.co.jp

KR **HEIDENHAIN Korea LTD.**
Gasan-Dong, Seoul, Korea 153-782
www.heidenhain.co.kr

MX **HEIDENHAIN CORPORATION MEXICO**
20235 Aguascalientes, Ags., Mexico
E-mail: info@heidenhain.com

MY **ISOSERVE SDN. BHD.**
43200 Balakong, Selangor
E-mail: isoserve@po.jaring.my

NL **HEIDENHAIN NEDERLAND B.V.**
6716 BM Ede, Netherlands
www.heidenhain.nl

NO **HEIDENHAIN Scandinavia AB**
7300 Orkanger, Norway
www.heidenhain.no

PH **Machinebanks` Corporation**
Quezon City, Philippines 1113
E-mail: info@machinebanks.com

PL **APS**
02-384 Warszawa, Poland
www.heidenhain.pl

PT **FARRESA ELECTRÓNICA, LDA.**
4470 - 177 Maia, Portugal
www.farresa.pt

RO **HEIDENHAIN Reprezentanţă Romania**
Braşov, 500407, Romania
www.heidenhain.ro

RS Serbia → **BG**

RU **OOO HEIDENHAIN**
125315 Moscow, Russia
www.heidenhain.ru

SE **HEIDENHAIN Scandinavia AB**
12739 Skärholmen, Sweden
www.heidenhain.se

SG **HEIDENHAIN PACIFIC PTE LTD.**
Singapore 408593
www.heidenhain.com.sg

SK **KOPRETINA TN s.r.o.**
91101 Trencin, Slovakia
www.kopretina.sk

SL **NAVO d.o.o.**
2000 Maribor, Slovenia
www.heidenhain.si

TH **HEIDENHAIN (THAILAND) LTD**
Bangkok 10250, Thailand
www.heidenhain.co.th

TR **T&M Mühendislik San. ve Tic. LTD. ŞTİ.**
34728 Ümraniye-Istanbul, Turkey
www.heidenhain.com.tr

TW **HEIDENHAIN Co., Ltd.**
Taichung 40768, Taiwan R.O.C.
www.heidenhain.com.tw

UA **Gertner Service GmbH Büro Kiev**
01133 Kiev, Ukraine
www.heidenhain.ua

US **HEIDENHAIN CORPORATION**
Schaumburg, IL 60173-5337, USA
www.heidenhain.com

VE **Maquinaria Diekmann S.A.**
Caracas, 1040-A, Venezuela
E-mail: purchase@diekmann.com.ve

VN **AMS Co. Ltd**
HCM City, Vietnam
E-mail: davidgoh@amsvn.com

ZA **MAFEMA SALES SERVICES C.C.**
Midrand 1685, South Africa
www.heidenhain.co.za

Zum Abheften hier falzen! / *Fold here for filing!*

208893-2M · 7 · 7/2013 · H · Printed in Germany